Thermostatic steam trap

Thermostatic steam trap
PN16

- with flanges (Fig. 610....1)
- union with butt weld ends (Fig. 610....5)

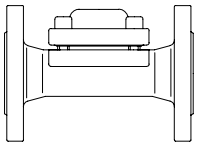

Grey cast iron
Fig. 610 Page 2

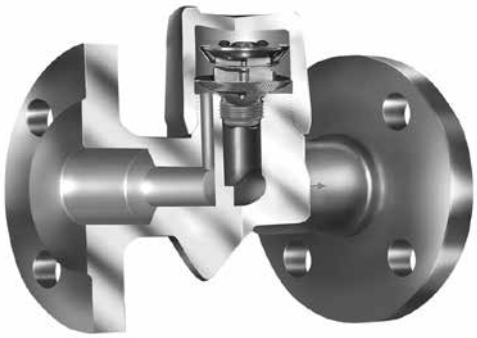

Fig. 610....1

Thermostatic steam trap
PN40

- with flanges (Fig. 610/612....1)
- with screwed sockets (Fig. 610/612....2)
- with socket weld ends (Fig. 610/612....3)
- with butt weld ends (Fig. 610/612....4)

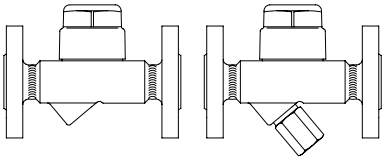

Forged steel
Stainless steel
Fig. 610/612 (Y) Page 4

Thermostatic steam trap
With seat for higher flow capacity than Fig. 610/612
PN40

- with flanges (Fig. 611/613....1)
- with screwed sockets (Fig. 611/613....2)
- with socket weld ends (Fig. 611/613....3)
- with butt weld ends (Fig. 611/613....4)

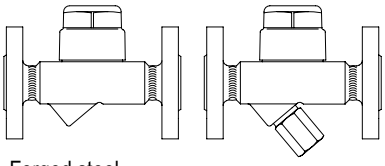

Forged steel
High temperature steel
Stainless steel
Fig. 611/613 (Y) Page 6

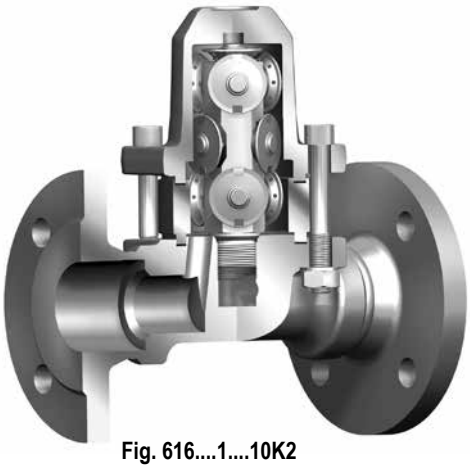

Fig. 616....1....10K2

Thermostatic steam trap
pilot operated / with multi capsule for very high flow capacity
PN16 / PN40

- with flanges (Fig. 616....1)
- with screwed sockets (Fig. 616....2)
- with socket weld ends (Fig. 616....3)
- with butt weld ends (Fig. 616....4)

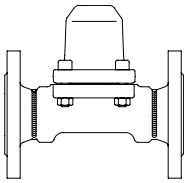

Grey cast iron
Forged steel
Fig. 616 Page 8 + 10

Thermostatic steam trap
PN16 / PN40

- with screwed sockets (Fig. 614....2)
- union with butt weld ends (Fig. 614....5)
- with screwed male / screwed socket (Fig. 614....9)
- for clamp connection (Fig. 614....a)
- with compression ring connection (Fig. 614....c)
- with screwed sockets (Fig. 615....2)
- for clamp connection (Fig. 615....a)

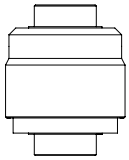

Stainless steel
Fig. 614/615 Page 12 + 14

Thermostatic steam trap
PN40

- Wafer pattern flange (Fig. 619....6)

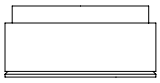

Stainless steel
Fig. 619 Page 15

Features:

- For discharging of slight to highly sub-cooled condensate
- Automatic air-venting during start up and operation of the plant
- High sensitivity
- Exact control characteristic
- Robust and resistant to water-hammer
- Integrated non return protection (Fig. 610/612; 611/613 (not at controller R5))
- Constructions:
  - With inside strainer
  - With outside strainer - Fig. 612 / 613 (Y)
- Optimized design for quick installation (except Fig. 610 PN16, Fig. 616)
- Gasket-free sealing of the screwed cap (PN40, DN15-25)
- Installation in any position (except cover/screwed cap downwards)
- Available types of capsule (sub-cooling from 5K to 40K)

Thermostatic steam trap (Grey cast iron)

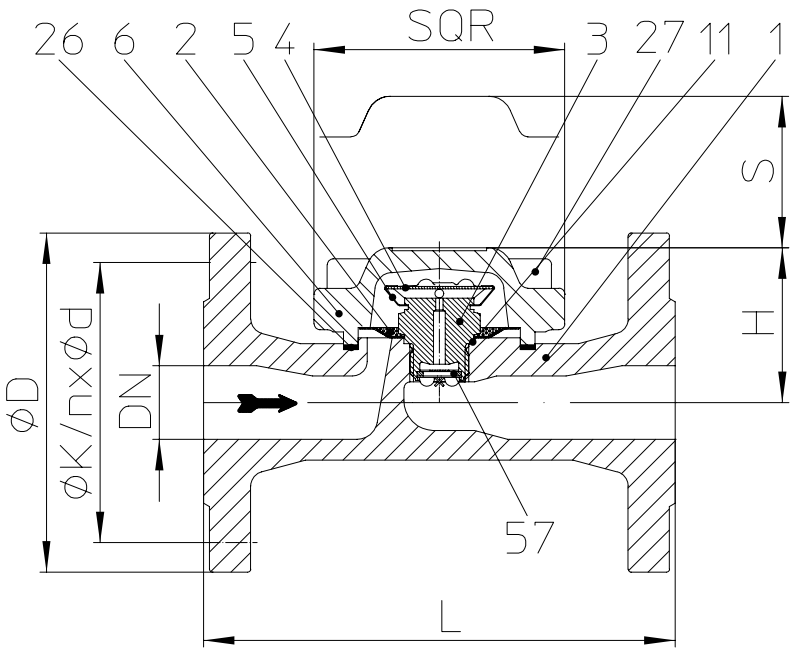

Fig. 610....1 with flanges (only DN25)

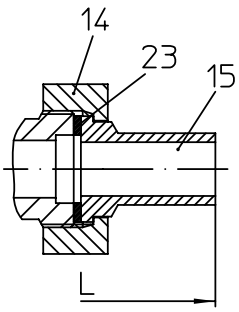

Fig. 610....5
union with butt weld ends

Figure	Nominal pressure	Material	Nominal diameter / NPS	Operating pressure PS	Inlet temperature TS	allowable differential pressure ΔPMX	for controller
12.610	PN16	EN-JL1040	DN15-50 / 1/2" - 2"	12,8 barg	200 °C	13 bar	R13
				9,6 barg	300 °C	5 bar	R5
For ANSI versions refer to data sheet CONA®M-ANSI							

Types of connection — Other types of connection on request.

- Flanges ....1 _____ acc. to DIN 2533 or DIN EN 1092-2
- Union with butt weld ends ....5 ____ acc. to data sheet resp. customer request

Features

- Thermostatic steam trap with noncorrosive and robust water hammer proofed capsule
- Non return protection (not at controller R5)
- With inside strainer
- Installation in any position

Capsule — (chooseable for operating range)

- Capsule No. 1 _____ for condensate discharge at boiling temperature - applicable up to 5 bar inlet pressure
- Capsule No. 2 _____ for condensate sub-cooling about approx. 10K (Standard)
- Capsule No. 3 _____ for condensate sub-cooling about approx. 30K
- Capsule No. 4 _____ for condensate sub-cooling about approx. 40K, especially suitable for tracing systems with low and medium pressure steam

Types of connection		Flanges	Union with butt weld ends	
DN		**25**	**15**	**20**
NPS		**1"**	**1/2"**	**3/4"**

Face-to-face acc. to data sheet resp. customer request				
L	(mm)	160	190	190

Dimensions				Standard-flange dimensions refer to page 17.
H	(mm)	55	55	55
S	(mm)	25	25	25
SQR	(mm)	85	85	85

Weights				
Fig. 610 (approx.)	(kg)	4,5	2,3	2,1

Parts

Pos.	Sp.p.	Description	Fig. 12.610
1		Body	EN-GJL-250, EN-JL1040
2	x	Strainer	X5CrNi18-10, 1.4301
3	x	Seat	X8CrNiS18-9, 1.4305
4	x	Capsule (Diaphragm / Capsule)	Hastelloy / X5CrNi18-10, 1.4301
5	x	Spring actuated clip	X10CrNi18-8, 1.4310
6		Cover	EN-GJL-250, EN-JL1040
11	x	Sealing ring	CU
14		Union nut	11SMn30+C, 1.0715+C
15		Welding end	C15, 1.0401
23	x	Sealing ring	Novapress MULTI
26	x	Gasket	Graphite (CrNi laminated with graphite)
27		Cheese head screw	A2-70
57		Non return protection	X5CrNi18-10, 1.4301
	└ Spare parts		

Information / restriction of technical rules need to be observed!
ARI-Valves of EN-JL1040 are not allowed to be operated in systems acc. to TRD 110.
Resistance and fitness must be verified (contact manufacturer for information, refer to Product overview and Resistance list).
Operating and installation instructions can be downloaded at www.ari-armaturen.com.

Capacity chart

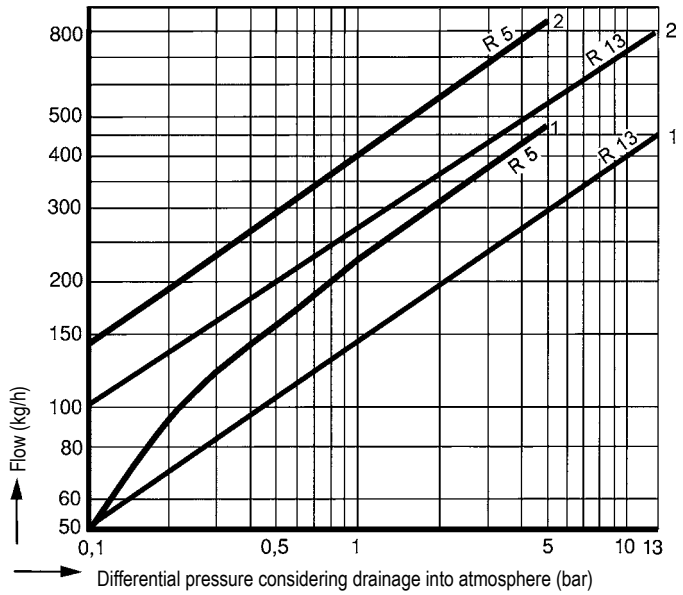

The capacity chart shows the maximum flow rates for controller.
Curve 1: Maximum flow of hot condensate for capsule No. 1, 2, 3 and 4.
Curve 2: Maximum flow at cold condensate at about 20°C.

Thermostatic steam trap (Forged steel, Stainless steel)

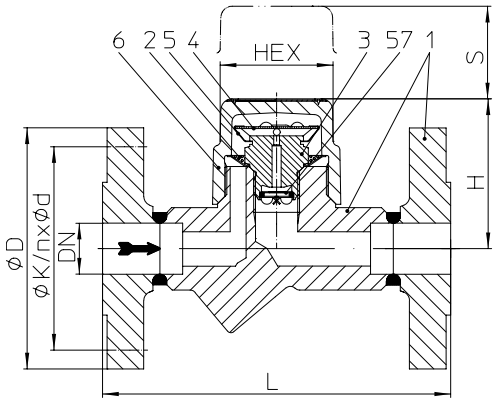

Fig. 610....1 with flanges

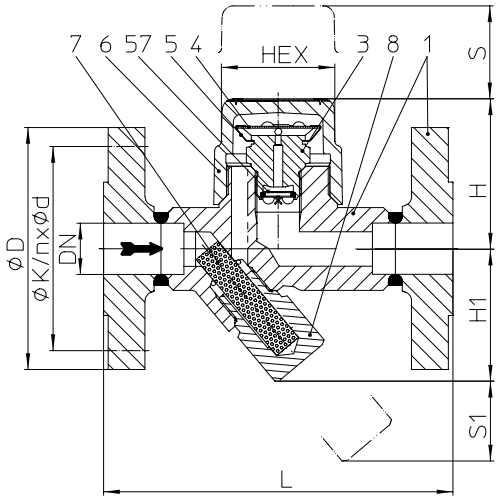

Fig. 612....1 with flanges

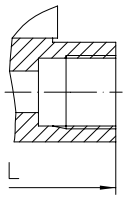

Fig. 610/612....2
with screwed sockets

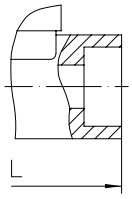

Fig. 610/612....3
with socket weld ends

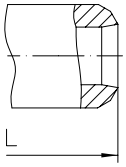

Fig. 610/612....4
with butt weld ends

Figure	Nominal pressure	Material	Nominal diam. / NPS	Operating pressure PS	Inlet temperature TS	allowable differential pressure ΔPMX	for controller
45.610 45.612 (Y)	PN40	1.0460	15 - 25 / 1/2" - 1"	22 barg	385 °C	22 bar 5 bar	R22 R5
				14,5 barg	450 °C		
55.610 55.612 (Y)	PN40	1.4541	15 - 25 / 1/2" - 1"	22 barg	400 °C		
For ANSI versions refer to data sheet CONA®M-ANSI							

Types of connection — Other types of connection on request.

- Flanges ....1 _____ acc. to DIN 2635 or DIN EN 1092-1
- Screwed sockets ....2 _____ Rp thread acc. to DIN EN 10226-1 or NPT thread acc. to ANSI B1.20.1
- Socket weld ends ....3 _____ acc. to DIN EN 12760
- Butt weld ends ....4 _____ Weld preparation acc. to EN ISO 9692 identification No. 1.3 and 1.5
  (Note restriction on operating pressure / inlet temperature depending to design!)

Features

- Thermostatic steam trap with noncorrosive and robust water hammer proofed capsule
- Non return protection (not at controller R5)
- With inside strainer - Fig. 610 / With outside strainer - Fig. 612 (Y)
- Installation in any position, optimal filter effect at horizontal installation
- Optimized design for quick installation
- Maintenance simplified due to screwed cap without sealing

Capsule — (chooseable for operating range)

- Capsule No. 1 _____ for condensate discharge at boiling temperature - applicable up to 5 bar inlet pressure
- Capsule No. 2 _____ for condensate sub-cooling about approx. 10K (Standard)
- Capsule No. 3 _____ for condensate sub-cooling about approx. 30K
- Capsule No. 4 _____ for condensate sub-cooling about approx. 40K - applicable up to 16 bar inlet pressure,
  especially suitable for tracing systems with low and medium pressure steam

Types of connection		Flanges			Screwed sockets Socket weld ends			Butt weld ends		
DN		**15**	**20**	**25**	**15**	**20**	**25**	**15**	**20**	**25**
NPS		**1/2"**	**3/4"**	**1"**	**1/2"**	**3/4"**	**1"**	**1/2"**	**3/4"**	**1"**
Face-to-face acc. to data sheet resp. customer request										
L	(mm)	150	150	160	95	95	95	250	250	250
Dimensions										Standard-flange dimensions refer to page 17.
H	(mm)	65	65	65	65	65	74	65	65	65
H1	(mm)	62	62	62	62	62	55	62	62	62
S	(mm)	40	40	40	40	40	40	40	40	40
S1	(mm)	24	24	24	24	24	24	24	24	24
HEX	(mm)	50	50	50	50	50	50	50	50	50
Weights										
Fig. 610/612 (appr.)	(kg)	2,7	3,3	3,7	1,4	1,3	1,8	1,8	1,9	2

Parts

Pos.	Sp.p.	Description	Fig. 45.610 / 45.612	Fig. 55.610 / 55.612
1		Body	P250 GH, 1.0460	X6CrNiTi18-10, 1.4541
2	x	Strainer	X5CrNi18-10, 1.4301	
3	x	Seat	X8CrNiS18-9, 1.4305	
4	x	Capsule (Diaphragm / Capsule)	Hastelloy / X5CrNi18-10, 1.4301	
5	x	Spring actuated clip	X10CrNi18-8, 1.4310	
6		Cap	P250 GH, 1.0460	X6CrNiTi18-10, 1.4541
7	x	Strainer	X5CrNi18-10, 1.4301	
8	x	Strainer plug	X6CrNiTi18-10, 1.4541	X6CrNiTi18-10, 1.4541
46	x	Blow down valve, cpl.	X6CrNiTi18-10, 1.4541	X6CrNiTi18-10, 1.4541
56	x	Ball valve for blow down (G 3/8")	GX5CrNiMo19-11-2, 1.4408	
57		Non return protection	X5CrNi18-10, 1.4301	
	└ Spare parts			

Information / restriction of technical rules need to be observed!

Resistance and fitness must be verified (contact manufacturer for information, refer to Product overview and Resistance list).

Operating and installation instructions can be downloaded at www.ari-armaturen.com.

Capacity chart

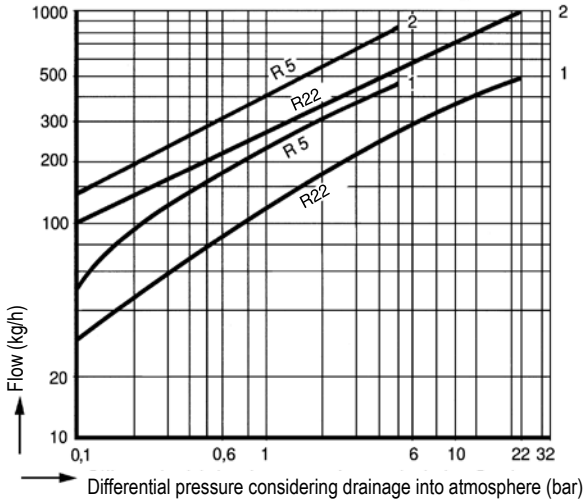

The capacity chart shows the maximum flow rates for controller.

Curve 1:
Maximum flow of hot condensate for capsule No. 1, 2, 3 and 4.

Curve 2:
Maximum flow at cold condensate at about 20°C.

Options

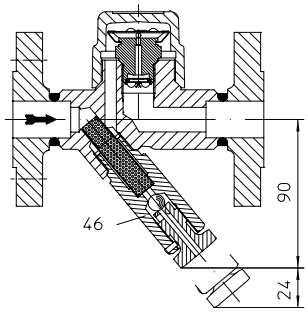

Outside strainer with blow down valve

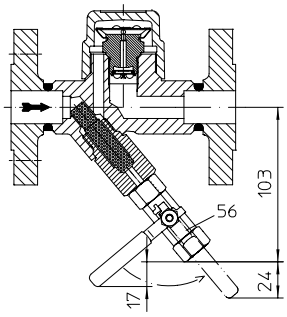

Ball valve with adapter for blow down with internal strainer
(restricted to 16 bar, 210°C)

Thermostatic steam trap for higher flow capacity (Forged steel, High temperature steel, Stainless steel)

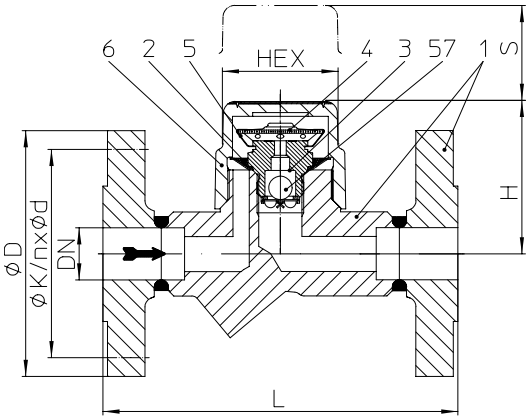

Fig. 611....1 with flanges

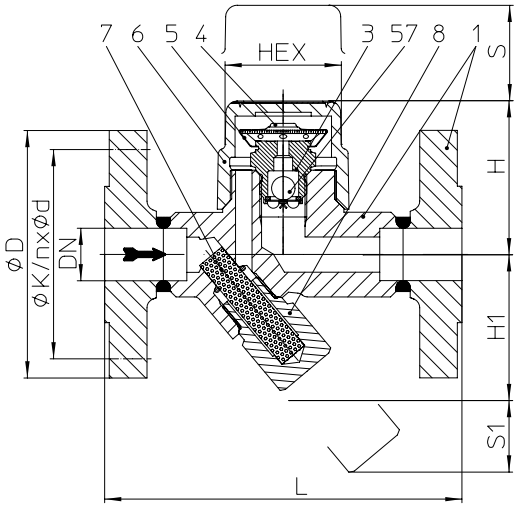

Fig. 613....1 with flanges

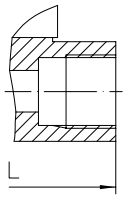

Fig. 611/613....2
with screwed sockets

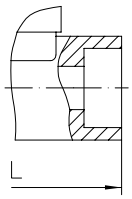

Fig. 611/613....3
with socket weld ends

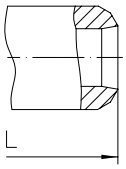

Fig. 611/613....4
with butt weld ends

Figure	Nominal pressure	Material	Nominal diameter / NPS	Operating pressure PS	Inlet temperature TS	allowable differential pressure ΔPMX	for controller
45.611 45.613 (Y)	PN40	1.0460	15 - 25 / 1/2" - 1"	32 barg	250 °C	32 bar	R32
				22 barg	385 °C		
				14,5 barg	450 °C		
85.611 85.613 (Y)	PN40	16Mo3	15 - 25 / 1/2" - 1"	35 barg	300 °C		
				32 barg	335 °C		
				28 barg	450 °C		
55.611 55.613 (Y)	PN40	1.4541	15 - 25 / 1/2" - 1"	32 barg	350 °C		
				22 barg	400 °C		
For ANSI versions refer to data sheet CONA®M-ANSI							

Types of connection — Other types of connection on request.

- Flanges ....1 _____ acc. to DIN 2635 or DIN EN 1092-1
- Screwed sockets ....2 _____ Rp thread acc. to DIN EN 10226-1 or NPT thread acc. to ANSI B1.20.1
- Socket weld ends ....3 _____ acc. to DIN EN 12760
- Butt weld ends ....4 _____ Weld preparation acc. to EN ISO 9692 identification No. 1.3 and 1.5
  (Note restriction on operating pressure / inlet temperature depending to design!)

Features

- Thermostatic steam trap with noncorrosive and robust water hammer proofed capsule
- **With seat for higher flow capacity than Fig. 610/612**
- Non return protection
- With inside strainer - Fig. 611 / With outside strainer - Fig. 613 (Y)
- Installation in any position, optimal filter effect at horizontal installation
- Optimized design for quick installation
- Maintenance simplified due to screwed cap without sealing

Capsule — (chooseable for operating range)

- Capsule No. 1 _____ for condensate discharge at boiling temperature - applicable up to 5 bar inlet pressure
- Capsule No. 2 _____ for condensate sub-cooling about approx. 10K (Standard)
- Capsule No. 3 _____ for condensate sub-cooling about approx. 30K

Options — (Design refer to page 7)

- Outside strainer with blow down valve (Pos. 46)
- Ball valve for blow down (pos. 56) with internal strainer (Observe operating and installation instructions!)

Types of connection		Flanges			Screwed sockets Socket weld ends			Butt weld ends		
DN		**15**	**20**	**25**	**15**	**20**	**25**	**15**	**20**	**25**
NPS		**1/2"**	**3/4"**	**1"**	**1/2"**	**3/4"**	**1"**	**1/2"**	**3/4"**	**1"**
Face-to-face acc. to data sheet resp. customer request										
L	(mm)	150	150	160	95	95	95	250	250	250
Dimensions										Standard-flange dimensions refer to page 17.
H	(mm)	65	65	65	65	65	74	65	65	65
H1	(mm)	62	62	62	62	62	55	62	62	62
S	(mm)	40	40	40	40	40	40	40	40	40
S1	(mm)	24	24	24	24	24	24	24	24	24
HEX	(mm)	50	50	50	50	50	50	50	50	50
Weights										
Fig. 611/613 (appr.)	(kg)	2,7	3,3	3,7	1,4	1,3	1,8	1,8	1,9	2

Parts

Pos.	Sp.p.	Description	Fig. 45.611 / 45.613	Fig. 85.611 / 85.613	Fig. 55.611 / 55.613
1		Body	P250 GH, 1.0460	16Mo3, 1.5415	X6CrNiTi18-10, 1.4541
2	x	Strainer	X5CrNi18-10, 1.4301		
3	x	Seat	X8CrNiS18-9, 1.4305		
4	x	Capsule B (Diaphragm / Capsule)	Hastelloy / X5CrNi18-10, 1.4301		
5	x	Spring actuated clip	X10CrNi18-8, 1.4310		
6		Cap	P250 GH, 1.0460	16Mo3, 1.5415	X6CrNiTi18-10, 1.4541
7	x	Strainer	X5CrNi18-10, 1.4301		
8	x	Strainer plug	X6CrNiTi18-10, 1.4541		
46	x	Blow down valve, cpl.	X6CrNiTi18-10, 1.4541		
56	x	Ball valve for blow down (G 3/8")	GX5CrNiMo19-11-2, 1.4408		
57		Non return protection	X20Cr13+QT, 1.4021+QT		
	└ Spare parts				

Information / restriction of technical rules need to be observed!

Resistance and fitness must be verified (contact manufacturer for information, refer to Product overview and Resistance list).

Operating and installation instructions can be downloaded at www.ari-armaturen.com.

Capacity chart

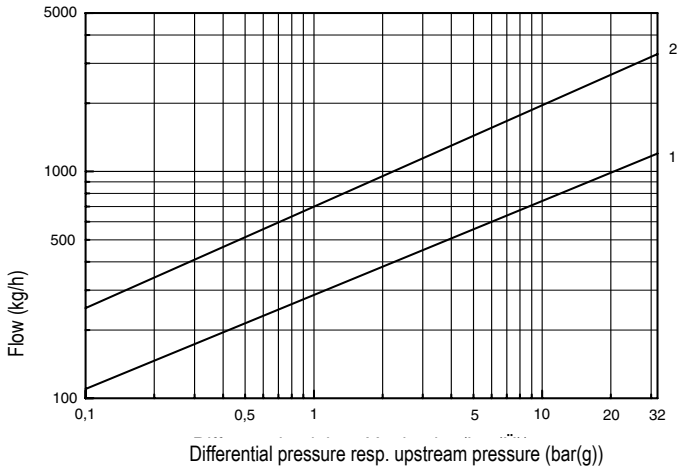

The capacity chart shows the maximum flow rates for controller.

Curve 1:
The capacity chart shows the maximum flow of hot condensate for capsule No. 1, 2 and 3.

Curve 2:
Maximum flow at cold condensate at about 20°C.

Options

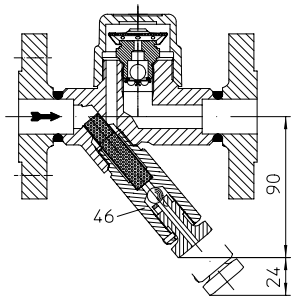

Outside strainer with blow down valve

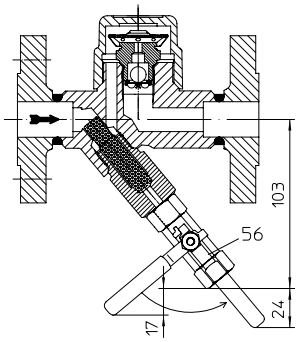

Ball valve with adapter for blow down with internal strainer (restricted to 16 bar, 210°C)

Thermostatic steam trap pilot operated for very high flow capacity (Grey cast iron)

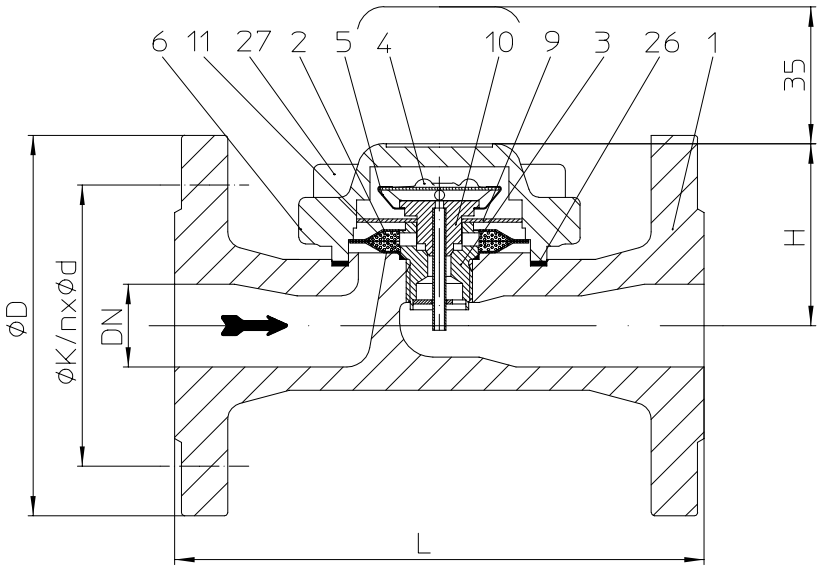

Fig. 616....1 with flanges

Figure	Nominal pressure	Material	Nominal diameter / NPS	Operating pressure PS	Inlet temperature TS	allowable differential pressure ΔPMX	for controller
12.616	PN16	EN-JL1040	DN25-50 / 1" - 2"	12,8 barg	200 °C	13 bar	R13
				9,6 barg	300 °C		
For ANSI versions refer to data sheet CONA®M-ANSI							

Types of connection	Other types of connection on request.
• Flanges ....1 _____	acc. to DIN 2533 or DIN EN 1092-2
Features	
• Thermostatic steam trap with noncorrosive and robust water hammer proofed capsule	
• **Pilot operated for discharge of very high flow capacity**	
• With double-inside strainer - Fig. 616	
• Installation in any position, except cover downwards	
Capsule	(chooseable for operating range)
• Capsule No. 1 _____	for condensate discharge at boiling temperature - applicable up to 5 bar inlet pressure
• Capsule No. 2 _____	for condensate sub-cooling about approx. 10K (Standard)
• Capsule No. 3 _____	for condensate sub-cooling about approx. 30K

Types of connection		Flanges	
DN		**25**	**50**
NPS		**1"**	**2"**

Face-to-face acc. to data sheet resp. customer request			
L	(mm)	160	230

Dimensions			Standard-flange dimensions refer to page 17.
H	(mm)	60	58
S	(mm)	28	35

Weights			
Fig. 616 (approx.)	(kg)	4	9,5

Parts

Pos.	Sp.p.	Description	Fig. 12.616
1		Body	EN-GJL-250, EN-JL1040
2	x	Strainer / Filter screen	X5CrNi18-10, 1.4301
3	x	Seat	X8CrNiS18-9, 1.4305
4	x	Capsule (Diaphragm / Capsule)	Hastelloy / X5CrNi18-10, 1.4301
5	x	Spring actuated clip	X10CrNi18-8, 1.4310
6		Cover	EN-GJL-250, EN-JL1040
9	x	Plate piston	X5CrNi18-10, 1.4301
10	x	Nozzle piston	DN25: X8CrNiS18-9, 1.4305 / DN50: X17CrNi16-2, 1.4057
11	x	Bague	Cu
26	x	Gasket	Graphite (CrNi laminated with graphite)
27		Cheese head screw	A2-70
	└ Spare parts		

Information / restriction of technical rules need to be observed!

Resistance and fitness must be verified (contact manufacturer for information, refer to Product overview and Resistance list).

Operating and installation instructions can be downloaded at www.ari-armaturen.com.

Capacity chart

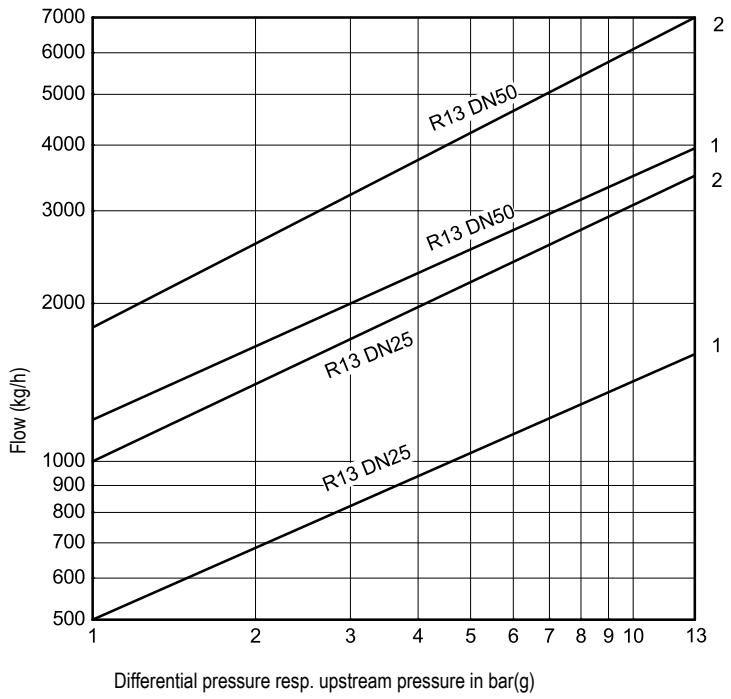

The capacity chart shows the maximum flow rates for controller.

Curve 1:
The capacity chart shows the maximum flow of hot condensate for capsule No. 1, 2 and 3 (Pilot and main valve).

Curve 2:
Maximum flow at cold condensate at about 20°C.

Thermostatic steam trap with multi capsule for very high flow capacity (Forged steel)

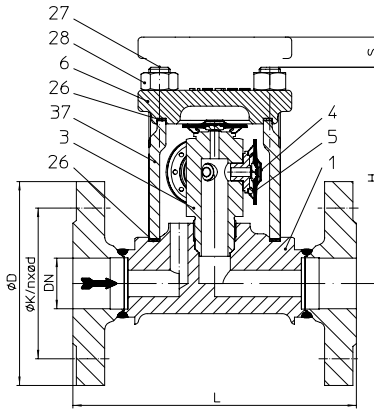

Fig. 616....1....4K2 (DN25) with 4 capsules, with flanges

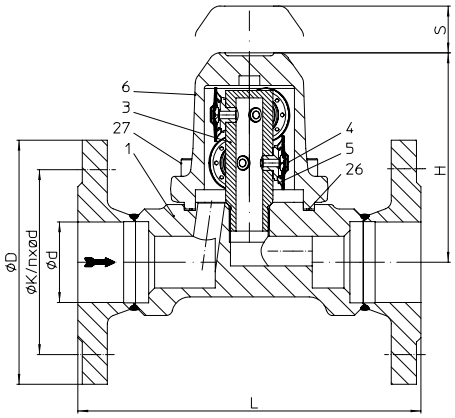

Fig. 616....1....6K2 (DN40-50) with 6 capsules, with flanges

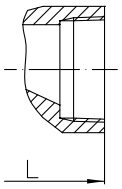

Fig. 616....2
with screwed sockets

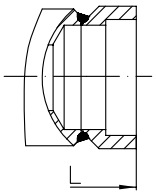

Fig. 616....3
with socket weld ends

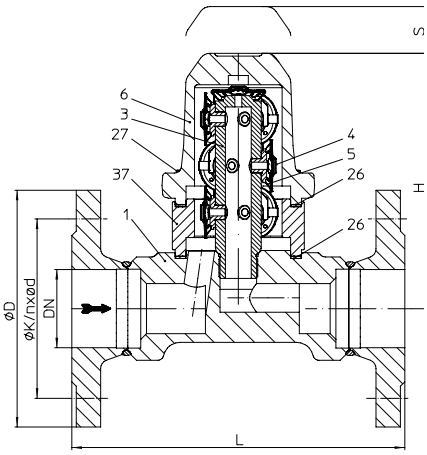

Fig. 616....1....10K2 (DN40-50) with 10 capsules, with flanges

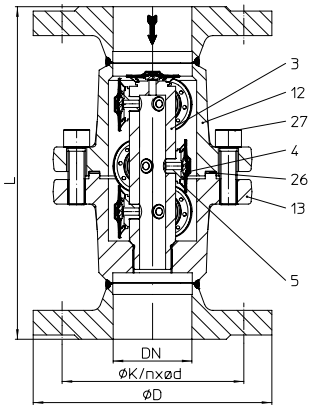

Fig. 616....1....10K2 (DN40-50) with 10 capsules, with flanges -
In-line design

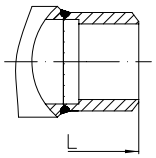

Fig. 616....4
with butt weld ends

Figure	Nominal pressure	Material	Nominal diam. / NPS	Operating pressure PS	Inlet temperature TS	allowable differential pressure ΔPMX	for controller
45.616....4K2 **with 4 capsules**	PN40	1.0460 [1)]	25 / 1"	32 barg	250 °C	32 bar	R32
				14,5 barg	450 °C		
45.616....6K2 **with 6 capsules**	PN40	1.0460 [1)]	40 - 50 / 1 1/2" - 2"	32 barg	250 °C		
				14,5 barg	450 °C		
45.616....10K2 **with 10 capsules**	PN40	1.0460 [1)]	40 - 50 / 1 1/2" - 2"	32 barg	250 °C		
				14,5 barg	450 °C		
45.616....10K2 **with 10 capsules In-line design**	PN40	1.0460 [1)]	40 - 50 / 1 1/2" - 2"	28,3 barg	250 °C		
				13,1 barg	450 °C		

We recommend a ARI Strainer Fig. 050 in front of the steam trap. [1)] 1.4541 on request

For ANSI versions refer to data sheet CONA®M-ANSI

Types of connection — Other types of connection on request.

- Flanges ....1 _____ acc. to DIN 2635 or DIN EN 1092-1
- Screwed sockets ....2 _____ Rp thread acc. to DIN EN 10226-1 or NPT thread acc. to ANSI B1.20.1
- Socket weld ends ....3 _____ acc. to DIN EN 12760
- Butt weld ends ....4 _____ Weld preparation acc. to EN ISO 9692 identification No. 1.3 and 1.5
  (Note restriction on operating pressure / inlet temperature depending to design!)

Features

- Thermostatic steam trap with noncorrosive and robust water hammer proofed capsule
- **With multi capsule for discharge of very high flow capacity**
- Installation in any position, except cover downwards

Capsule

- Capsule No. 2 _____ for condensate sub-cooling about approx. 10K (Standard)

Types of connection		Flanges			Screwed sockets Socket weld ends			Butt weld ends		
DN		25	40	50	25	40	50	25	40	50
NPS		1"	1 1/2"	2"	1"	1 1/2"	2"	1"	1 1/2"	2"
Face-to-face acc. to data sheet resp. customer request										
L	(mm)	160	230	230	on request			on request		
Dimensions										Standard-flange dimensions refer to page 17.
H	4 capsules (mm)	125	--	--	on request			on request		
	6 capsules (mm)	--	144	144						
	10 capsules (mm)	--	185	185						
S	(mm)	65	90	90						
Weights										
Fig. 616 (approx.)	(kg)	6,5	11,3	12,1	on request			on request		

Parts

Pos.	Sp.p.	Description	Fig. 45.616....4K2, with 4 capsules	Fig. 45.616....6K2 with 6 capsules	Fig. 45.616....10K2 with 10 capsules	Fig. 45.616....10K2 with 10 capsules In-line design
1		Body	P250 GH, 1.0460			
3	x	Seat	X8CrNiS18-9, 1.4305			
4	x	Capsule (Diaphragm / Capsule)	Hastelloy / X5CrNi18-10, 1.4301			
5	x	Spring actuated clip	X10CrNi18-8, 1.4310			
6		Cover	P250 GH, 1.0460			--
12		Bonnet	--			P250 GH, 1.0460
13		Body	--			P250 GH, 1.0460
26	x	Gasket	Graphite (CrNi laminated with graphite)			
27		Cheese head screw	--	21CrMoV 5-7, 1.7709		21CrMoV 5-7, 1.7709
27		Stud	21CrMoV 5-7, 1.7709	--		--
28		Hexagonal nut	21CrMoV 5-7, 1.7709	21CrMoV 5-7, 1.7709		--
37		Intermediate flange	P250 GH, 1.0460	--	P250 GH, 1.0460	--
	└ Spare parts					

Information / restriction of technical rules need to be observed!

Resistance and fitness must be verified (contact manufacturer for information, refer to Product overview and Resistance list).

Operating and installation instructions can be downloaded at www.ari-armaturen.com.

Capacity chart

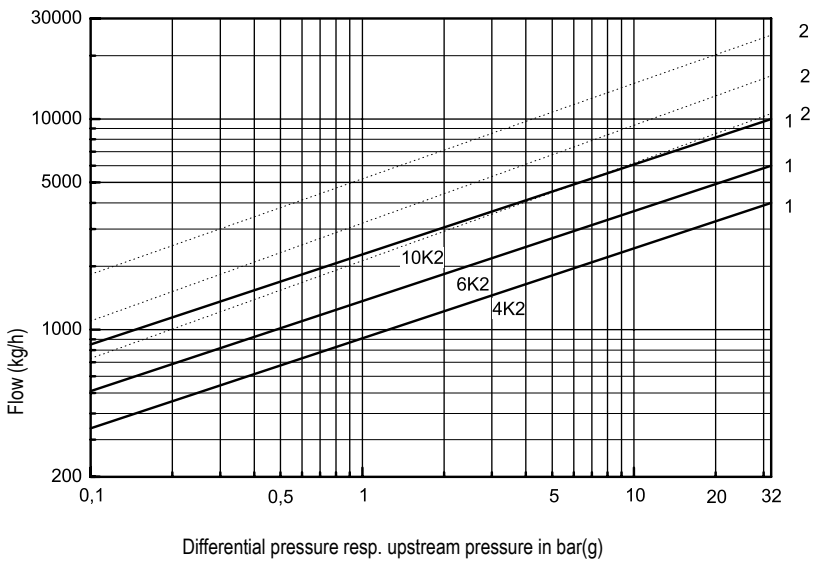

The capacity chart shows the maximum flow rates for controller.

Curve 1:
Maximum flow of hot condensate.

Curve 2:
Maximum flow at cold condensate at about 20°C.

Thermostatic steam trap - compact (Stainless steel)

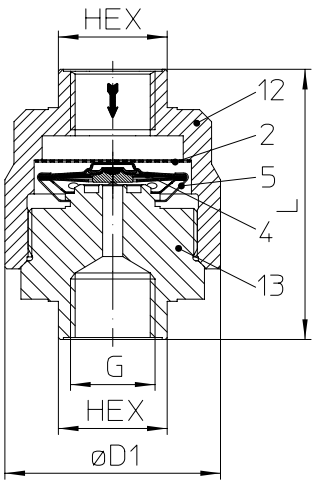

Fig. 614....2 with screwed sockets

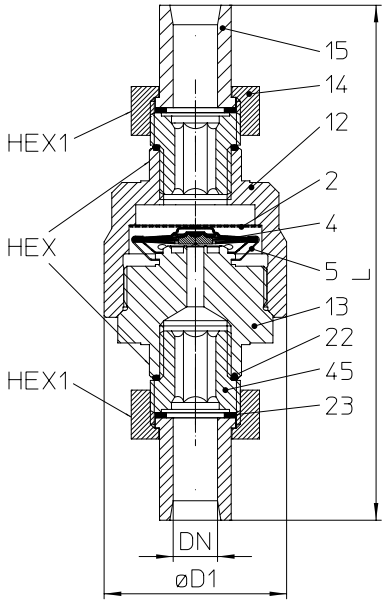

Fig. 614....5 union with butt weld ends

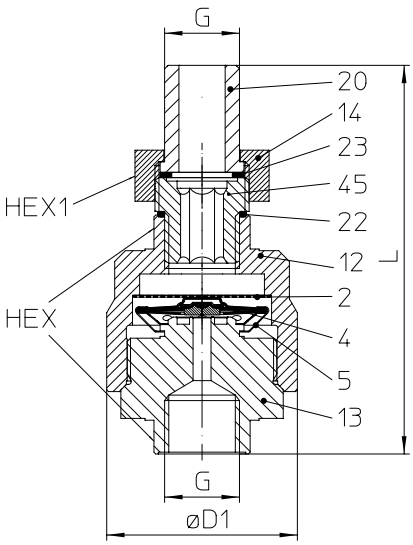

Fig. 614....9
Input: Screwed male, Output: Screwed socket

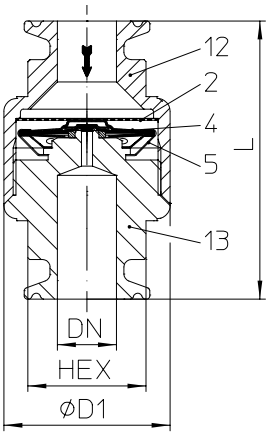

Fig. 614....a
for clamp connection (PN16)

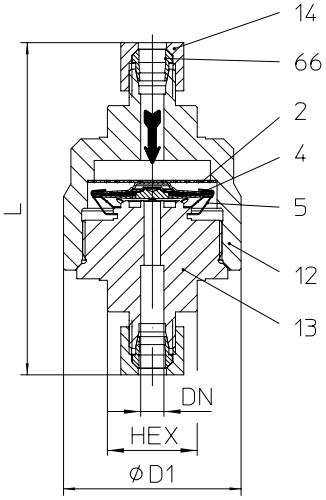

Fig. 614....c
with compression ring connection

Figure	Nominal pressure	Material	NPS	Operating pressure PS	Inlet temperature TS	allowable differential pressure ΔPMX	for controller
52.614	PN16	1.4305	1/4" - 1"	12 barg	190 °C	32 bar	R32
55.614	PN40	1.4305	1/4" - 1"	32 barg	250 °C		
	PN40	1.4305	1/4" - 1"	22 barg	400 °C		
For ANSI versions refer to data sheet CONA®M-ANSI							

Types of connection — Other types of connection on request.

- Screwed sockets ....2 _____ Rp thread acc. to DIN EN 10226-1 or NPT thread acc. to ANSI B1.20.1
- Union with butt weld ends ....5 _____ acc. to data sheet resp. customer request
- Input: Screwed male, Output: Screwed socket ....9 _____ Rp- and NPT-thread acc. to DIN EN 10226-1
- for clamp connection ....a _____ acc. to DIN 32676 or BS 4825-3
- with compression ring connection ....c _____ acc. to DIN 2353 or EN ISO 8434-1

Features

- Thermostatic steam trap with noncorrosive and robust water hammer proofed capsule
- With inside strainer
- Especially designed for instrumentation and product heating with sub-cooled condensate discharge
- Suitable as air vent for steam systems
- Corrosion resistant stainless steel body
- Installation in any position
- Optimized design for quick installation
- Maintenance simplified due to screwed cap without sealing

Capsule — (chooseable for operating range)

- Capsule No. 2 _____ for condensate sub-cooling about approx. 10K (Standard)
- Capsule No. 3 _____ for condensate sub-cooling about approx. 30K

Types of connection		Screwed sockets					Union with butt weld ends			Screwed male / screwed socket		for clamp connection (PN16)			Compr. ring con. (PN40)
NPS		**1/4"**	**3/8"**	**1/2"**	**3/4"**	**1"**	**1/4"**	**3/8"**	**1/2"**	**1/2"**	**3/4"**	**1/2"**	**3/4"**	**1"**	**DN 8**
Face-to-face acc. to data sheet resp. customer request															
L	(mm)	68	68	68	78	78	150	150	150	110	125	75	75	75	100
Dimensions															
D1	(mm)	53,5	53,5	53,5	53,5	53,5	53,5	53,5	53,5	53,5	53,5	45	45	45	53,5
G	(inch)	1/4	3/8	1/2	3/4	1	--	--	--	1/2	3/4	--	--	--	--
HEX	(mm)	27	27	27	41	41	27	27	27	27	27	36	36	36	27
HEX1	(mm)	--	--	--	--	--	32	32	32	32	32	--	--	--	--
Weights															
Fig. 614 (approx.)	(kg)	0,65	0,65	0,65	0,85	0,85	1,2	1,2	1,2	0,95	1,2	0,7	0,7	0,8	0,7

Parts

Pos.	Sp.p.	Description	Fig. 52.614	Fig. 55.614
2	x	Strainer	X5CrNi18-10, 1.4301	
4	x	Capsule B (Diaphragm / Capsule)	Hastelloy / X5CrNi18-10, 1.4301	
5	x	Spring actuated clip	X10CrNi18-8, 1.4310	
12		Bonnet	X8CrNiS18-9, 1.4305	
13		Body	X8CrNiS18-9, 1.4305	
14		Union nut	--	X14CrMoS17+QT, 1.4104+QT
15		Welding end	--	X20Cr13+QT, 1.4021+QT
20		Screwed male end (with outside thread)	--	X8CrNiS18-9, 1.4305
22	x	Sealing ring	--	A4
23	x	Gasket	--	Graphite (CrNi laminated with graphite)
45		Intermediate part	--	X8CrNiS18-9, 1.4305
66		Double edge cutting ring	--	Stainless steel
	└ Spare parts			

Information / restriction of technical rules need to be observed!

Resistance and fitness must be verified (contact manufacturer for information, refer to Product overview and Resistance list).

Operating and installation instructions can be downloaded at www.ari-armaturen.com.

Capacity chart

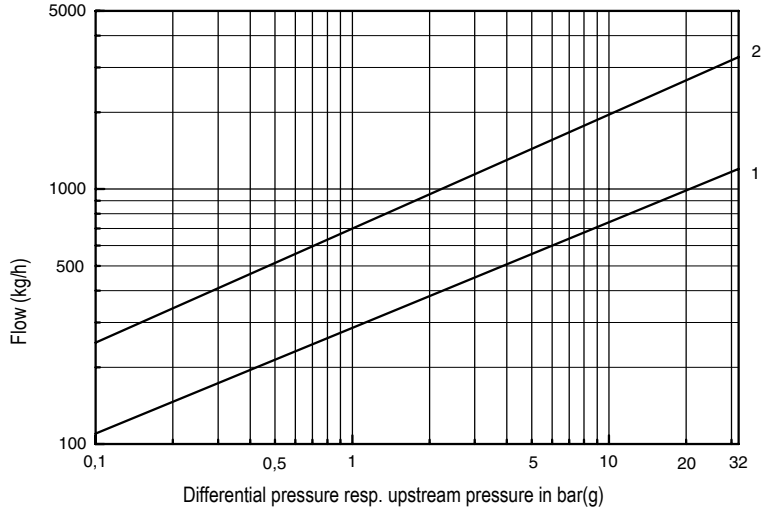

The capacity chart shows the maximum flow rates for controller.

Curve 1:
The capacity chart shows the maximum flow of hot condensate for capsule No. 2 and 3.

Curve 2:
Maximum flow at cold condensate at about 20°C.

Thermostatic steam trap - compact (Stainless steel)

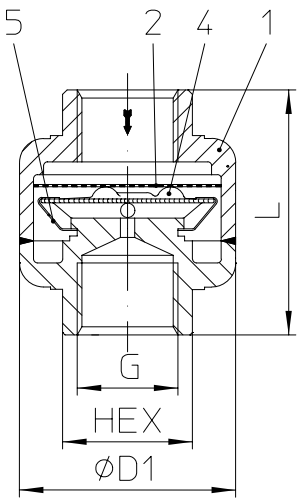

Fig. 615....2 with screwed sockets

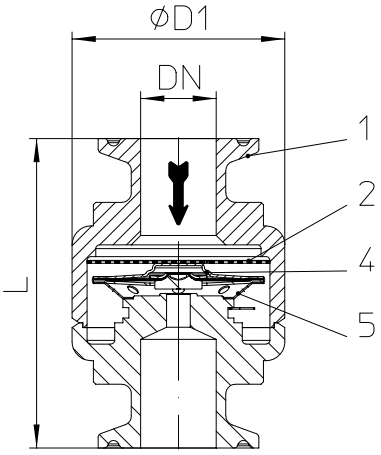

Fig. 615....a for clamp connection (PN16)

Capacity chart

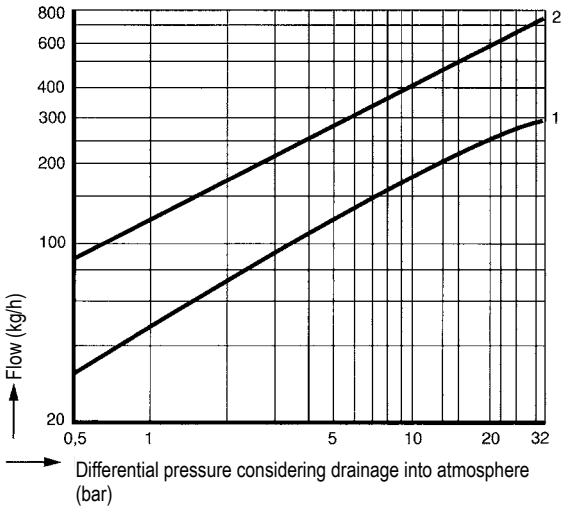

The capacity chart shows the maximum flow rates for controller.

Curve 1:
Maximum flow of hot condensate.

Curve 2:
Maximum flow at cold condensate at about 20°C.

Figure	Nominal pressure	Material	NPS	Operating pressure PS	Inlet temperature TS	allowable differential pressure ΔPMX	for controller
52.615	PN16	1.4301	1/4" - 1"	12 barg	190 °C	32 bar	R32
55.615	PN40	1.4301	1/4" - 1/2"	32 barg	250 °C		
For ANSI versions refer to data sheet CONA®M-ANSI							

Types of connection — Other types of connection on request.

- Screwed sockets ....2 _____Rp thread acc. to DIN EN 10226-1 or NPT thread acc. to ANSI B1.20.1
- for clamp connection ....a ____acc. to DIN 32676 or BS 4825-3

Features

- Thermostatic steam trap with noncorrosive and robust water hammer proofed capsule
- With inside strainer
- Especially designed for instrumentation and product heating with sub-cooled condensate discharge
- Corrosion resistant stainless steel body
- Installation in any position
- Discharge of condensate sub-cooled at 10K over the entire application range

Capsule

- Capsule No. 2 _____for condensate sub-cooling about approx. 10K (Standard)

Types of connection		Screwed sockets			for clamp connection (PN16)		
NPS		1/4"	3/8"	1/2"	1/2"	3/4"	1"
Face-to-face acc. to data sheet resp. customer request							
L*	(mm)	50	50	50	65	65	65
Dimensions							
D1	(mm)	45	45	45	45	45	45
G	(inch)	1/4	3/8	1/2	--	--	--
HEX	(mm)	27	27	27	--	--	--
Weights							
Fig. 615 (approx.)	(kg)	0,3	0,3	0,3	0,32	0,32	0,4

Parts

Pos.	Description	Fig. 55.615
1	Body	X5CrNi18-10, 1.4301
2	Strainer	X5CrNi18-10, 1.4301
4	Capsule (Diaphragm / Capsule)	Hastelloy / X5CrNi18-10, 1.4301
5	Spring actuated clip	X10CrNi18-8, 1.4310

Information / restriction of technical rules need to be observed!

Resistance and fitness must be verified (contact manufacturer for information, refer to Product overview and Resistance list).

Operating and installation instructions can be downloaded at www.ari-armaturen.com.

Wafer pattern-thermostatic steam trap (Stainless steel)

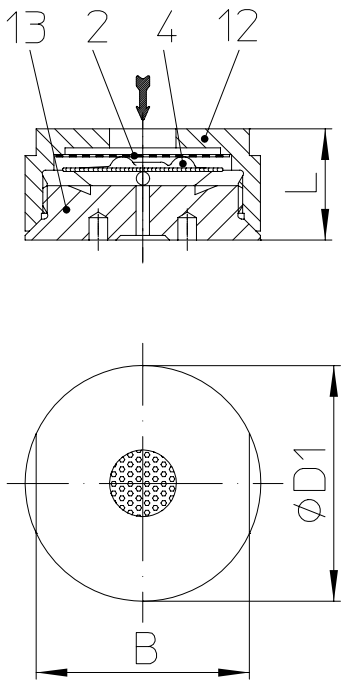

Fig. 619....6

Capacity chart

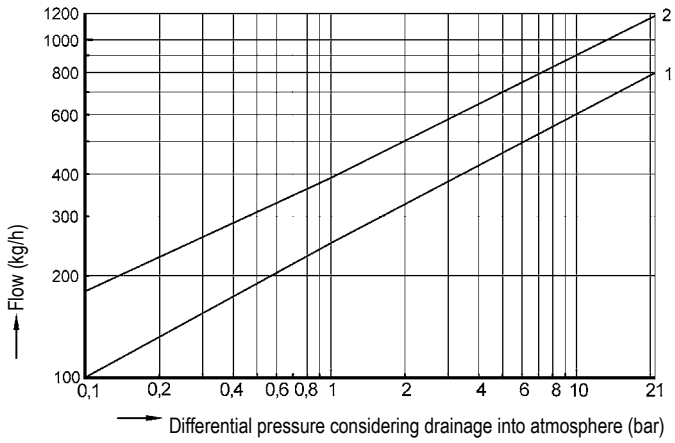

The capacity chart shows the maximum flow rates for controller.

Curve 1:
Maximum flow of hot condensate for capsule No. 1, 2, 3 and 4.

Curve 2:
Maximum flow at cold condensate at about 20°C.

Figure	Nominal pressure	Material	Nominal diameter	Operating pressure PS	Inlet temperature TS	allowable differential pressure ΔPMX	for controller
55.619	PN40	1.4305	DN15-25	21 barg	300 °C	21 bar	R21
For ANSI versions refer to data sheet CONA®M-ANSI							

Types of connection — Other types of connection on request.

- Intermediate flange ....6 _____acc. to DIN 2501

Features

- Thermostatic steam trap with noncorrosive and robust water hammer proofed capsule
- With inside strainer
- Space-saving wafer pattern steam trap
- Corrosion resistant stainless steel body
- Installation in any position
- Optimized design for quick installation
- Maintenance simplified due to screwed cap without sealing

Capsule — (chooseable for operating range)

- Capsule No. 1 _____for condensate discharge at boiling temperature - applicable up to 5 bar inlet pressure
- Capsule No. 2 _____for condensate sub-cooling about approx. 10K (Standard)
- Capsule No. 3 _____for condensate sub-cooling about approx. 30K
- Capsule No. 4 _____for condensate sub-cooling about approx. 40K - applicable up to 16 bar inlet pressure, especially suitable for tracing systems with low and medium pressure steam

Types of connection		Intermediate flange		
DN		15	20	25
Face-to-face acc. to data sheet resp. customer request				
L	(mm)	25	31,5	35
Dimensions				
D1	(mm)	53	63	72
B	(mm)	46	56	65
Weights				
Fig. 619 (approx.)	(kg)	0,45	0,65	0,85

Parts

Pos.	Sp.p.	Description	Fig. 55.619
2	x	Strainer	X5CrNi18-10, 1.4301
4	x	Capsule (Diaphragm / Capsule)	Hastelloy / X5CrNi18-10, 1.4301
12		Bonnet	X8CrNiS18-9, 1.4305
13		Body	X8CrNiS18-9, 1.4305
	└ Spare parts		

Information / restriction of technical rules need to be observed!

Resistance and fitness must be verified (contact manufacturer for information, refer to Product overview and Resistance list).

Operating and installation instructions can be downloaded at www.ari-armaturen.com.

myValve® - Ihr VAlve SIzing-Program.

myValve is a powerful software tool that not only helps you size your system components; it also gives you instant access to all other data about the selected product, such as order information, spare parts drawings, operating instructions, data sheets, etc., whenever you need it.

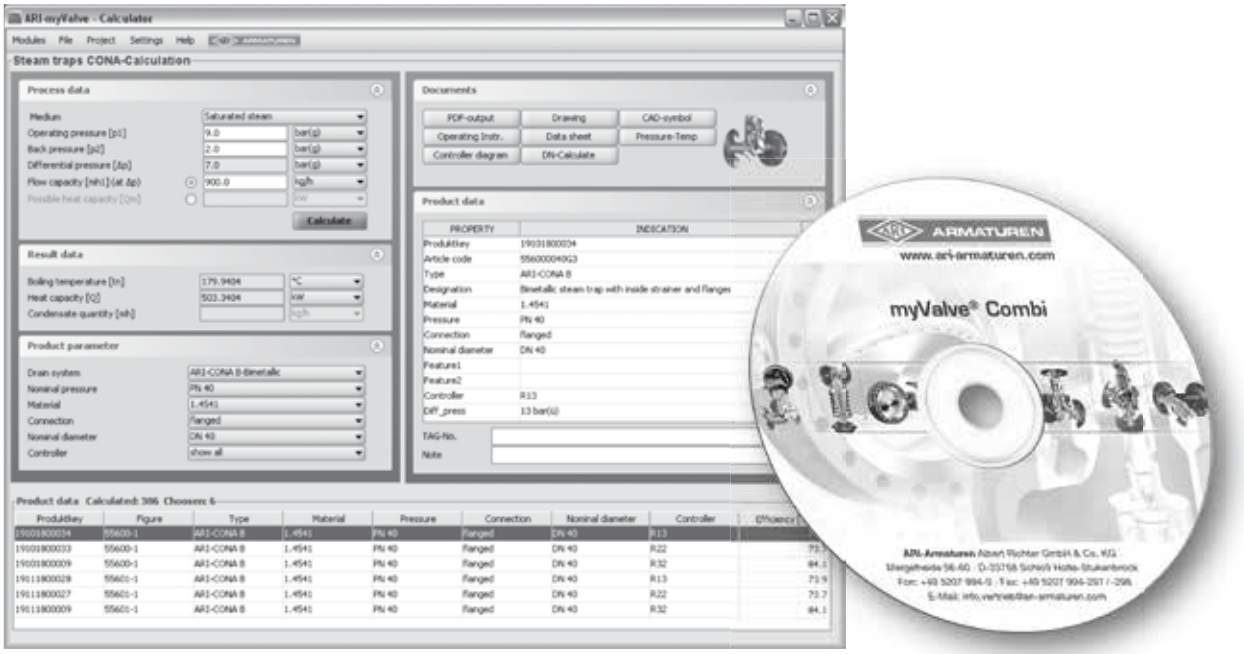

myValve - VAlve SIzing-Program

Contents:	**Module ARI-Steam trap CONA-Calcuation** - Sizing (calculation of steam trap systems with given flow capacity or heat capacity) - Calculation of nominal diameter acc. to given pressure, condensate quantity, condensate sub-cooling and speed
Media:	- Steam (saturated and superheated) - Compressed air
Special Features	- Project administration of the calculation and product data incl. spare part drawings concerning to project and tag number - Direct output or calculation and product data in PDF format - Product data could be taken for a direct order - SI- and ANSI-units with direct conversion to another databank - Settings with over pressure or absolute pressure - All ARI products are integrated in one databank - Direct access concerning to the product on data sheets, operating instructions, pressure-temperature-diagram and spare part drawings - Operation in company networks possible (no complex installations on individually PC's necessary) - Extensive catalogue extending over several product groups
System Requirements:	Windows operating systems, Linux, etc.

Informations about pipe welding

Welding groove acc. to DIN 2559

The material used for ARI valves with butt weld ends are:

1.0460	P250GH acc. to DIN EN 10222-2
1.0401	C15 acc. to DIN EN 10277-2
1.5415	16Mo3 acc. to DIN EN 10222-2
1.4541	X6CrNiTi18-10 acc. to DIN EN 10222-5
1.4021+QT	X20Cr13+QT acc. to DIN EN 10088-1

Note:
Note restriction on operating pressure / inlet temperature depending to design!

Due to our experience, we recommend to apply an electric welding process.

Because of the different material compositions and wall thickness of the steam traps and the pipe gas welding shall not be applied. Quenching cracks and coarse grain structure may develop.

On bimetallic steam traps face-to-face of 95 mm or less, the bimetallic controller has to be disassembled prior to welding. After the traps have cooled down to the ambient temperature the bimetallic controller shall be fitted again into the body.

Steam traps with socket-weld ends shall only be welded by arc welding (welding process 111 acc. to DIN EN 24063).

If during the time of warranty others than the manufacturer or by the manufacturer authorized persons are interfering in the product and/or the setting, the right of claim for warranty will lapse!

Standard-flange dimensions acc. to 2633 / 2635 or DIN EN 1092-1 / -2

DN			15	20	25	32	40	50
NPS			1/2"	3/4"	1"	1 1/4"	1 1/2"	2"
PN16	ØD	(mm)	95	105	115	140	150	165
	ØK	(mm)	65	75	85	100	110	125
	n x Ød	(mm)	4 x 14	4 x 14	4 x 14	4 x 18	4 x 18	4 x 18
PN40	ØD	(mm)	95	105	115	140	150	165
	ØK	(mm)	65	75	85	100	110	125
	n x Ød	(mm)	4 x 14	4 x 14	4 x 14	4 x 18	4 x 18	4 x 18

Selection criteria:		Example for order data:
• Steam pressure • Back pressure • Quantity of condensate • Nominal diameter / pressure	• Type of connection • Capsule (Capsule-Nr) • Material • Place of service or kind of steam consumer	**Thermostatic steam trap CONA® M, Fig. 610, PN40, DN15, 1.0460, Capsule-No. 2, with flanges, Face-to-face dimension 150 mm**

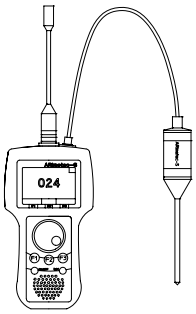

Multifunction tester
ARImetec®-S

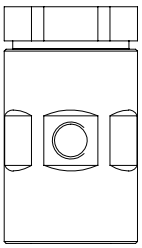

Vacuum breaker
Fig. 655

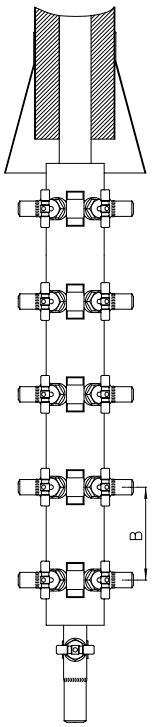

Condensate collection (B = 160), steam distribution (B = 120)
CODI ®S with gland packing Fig. 671/672;
CODI ®B with bellows seal, maintenance-free Fig. 675/676

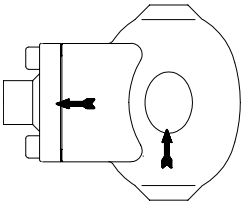

Automatic air vent for liquid systems
Fig. 656

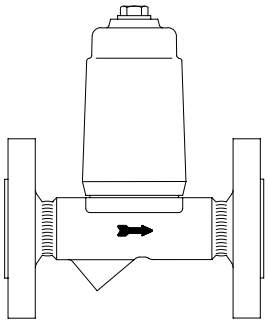

Condensate discharge temperature limiter
Fig. 645/647

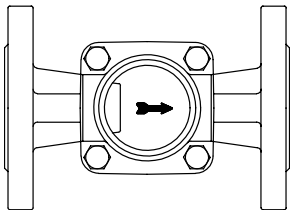

Flow indicator
Fig. 660/661

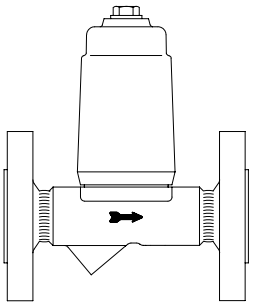

Return temperature limiter
Fig. 650

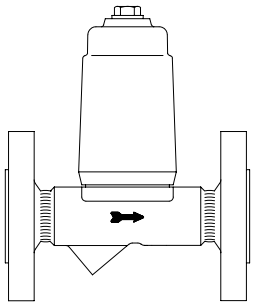

Liquid drainer
Fig. 665

(Further informations about the accessories can be found in the appropriate data sheets.)

ARI-Armaturen Albert Richter GmbH & Co. KG, D-33750 Schloß Holte-Stukenbrock,
Tel. +49 52 07 / 994-0, Telefax +49 52 07 / 994-158 or 159 Internet: http://www.ari-armaturen.com E-mail: info.vertrieb@ari-armaturen.com