ENGINEERING
TOMORROW

Data sheet

Pressure switches for air and water
CS

CS pressure switches have a built-in pressure operated, three-pole switch. The contact position of which depends on the pressure in the connector and the range setting and adjustable differential.

The pressure switches are fitted with a manual switch that will lock the contact system in the open position independently of the pressure in the system. Pressure switches with relief valve is used in compressed air systems where pressure relief on the compressor piston before start is required.

The CS is suited for automatic start and stop of air compressors and water boosters.

Features

- Pressure ranges 2 – 20 bar
- Pressure connection G ½ or G ¼
- Contact system 3-pole (TPST) as standard available also as an accessory
- Adjustable differential
- Relief valve as accessory
- Manual switch to lock the contact system
- Enclosure IP43 or IP55
- Special versions with pressure connection made of polyacetal suitable in drinking water applications

Approvals

EN 60 947-4-1
EN 60 947-5-1

Technical data

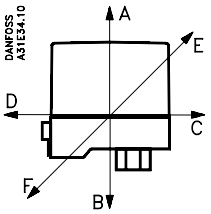

Specifications

Contact load	I_e	U_e
AC-3	12 A	220 – 415 V
AC-3	9 A	600 V
DC-13/14	2 A	220 V (3 contacts in series)

Electrical life on rated load	100.000 operations	
Mechanical life	1.000.000 operations	
Ambient temperature	-20 – 70 °C	
Temperature of medium [1])	Water	0 – 70 °C
	Air	-20 – 70 °C
Vibration-proof	0 – 1000 Hz at 4g	
Resonance frequency	Direction A-B	341 Hz
	Direction C-D	332 Hz
	Direction E-F	488 Hz
Diaphragm material	Hytrel	
Pressure connector	Special	Polyacetal, G ½
	Others	Silumin, G ¼ or G ½
Pressure relief valve (capacity)	2000 cm^3 from 10 – 1 bar in 18.8 sec.	
Grade of enclosure to IEC 529	IP43 or IP55	

[1]) For water and seawater, max. 80 °C.

Properties according to EN 60947

Wire dimension	solid / stranded	0.7 – 2.5 mm^2
	flexible, with / without ferrules	0.75 – 2.5 mm^2
	flexible, with ferrules	0.5 – 1.5 mm^2
Tightening torque	max. 1.2 Nm	
Rated impulse voltage	4 kV	
Pollution degree	3	
Short circuit protection, fuse	25 A	
Insulation	600 V	
IP-index	IP43 or IP55	

Ordering

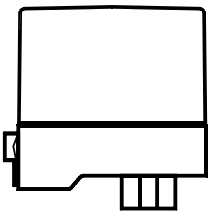

Standard pressure switch type CS

Stop pressure p_e [bar]	Min. differential Δp [bar]	Max. differential Δp [bar]	Max. test pressure p_e [bar]	Grade of enclo-sure	Pressure connection	Code no.	Type
2 – 6	0.72 – 1.0	1.0 – 2.0	10	IP43	G ¼	**031E020266**	1-pole
2 – 6	0.72 – 1.0	1.0 – 2.0	10	IP43	G ¼	**031E020066**	3-pole
2 – 6	0.72 – 1.0	1.0 – 2.0	10	IP55	G ¼	**031E020566**	3-pole
2 – 6	0.72 – 1.0	1.0 – 2.0	10	IP43	G ½	**031E021066**	3-pole
2 – 6	0.72 – 1.0	1.0 – 2.0	10	IP55	G ½	**031E021566**	3-pole
4 – 12	1 – 1.5	2.0 – 4.0	20	IP43	G ¼	**031E022066**	3-pole
4 – 12	1 – 1.5	2.0 – 4.0	20	IP55	G ¼	**031E022566**	3-pole
4 – 12	1 – 1.5	2.0 – 4.0	20	IP43	G ½	**031E023066**	3-pole
4 – 12	1 – 1.5	2.0 – 4.0	20	IP55	G ½	**031E023566**	3-pole
7 – 20	2 – 3.5	3.5 – 7.0	32	IP43	G ¼	**031E024066**	3-pole
7 – 20	2 – 3.5	3.5 – 7.0	32	IP55	G ¼	**031E024566**	3-pole
7 – 20	2 – 3.5	3.5 – 7.0	32	IP43	G ½	**031E025066**	3-pole
7 – 20	2 – 3.5	3.5 – 7.0	32	IP55	G ½	**031E025566**	3–pole

Preferred versions

Special versions with Polyacetal pressure connection - suitable for drinking water

Stop pressure p_e [bar]	Min. differential Δp [bar]	Max. differential Δp [bar]	Max. test pressure p_e [bar]	Grade of enclo-sure	Pressure connection	Code no.	Type
2 – 6	0.72 – 1.0	1.0 – 2.0	10	IP43	G ½	**031E101066**	3-pole
4 – 12	1 – 1.5	2.0 – 4.0	20	IP43	G ½	**031E101266**	3-pole
7 – 20	2 – 3.5	3.5 – 7.0	32	IP43	G ½	**031E101466**	3–pole

Accessories and spare parts

Description	Code no.
Three pole contact system (TPST)	**031E029166**
Pressure relief valve, incl. fixing screw (for 6 mm pipe/hose)	**031E029866**
Pressure relief valve, incl. fixing screw (for 1/4 in. pipe/hose)	**031E029766**
Two Pg 16 screwed cable entries with gaskets (cable diam. 6.5 – 15 mm)	**031E029366**
Nipple with 7/16-20 UNF and M10 x 1 int.	**031E029666**

Design and function

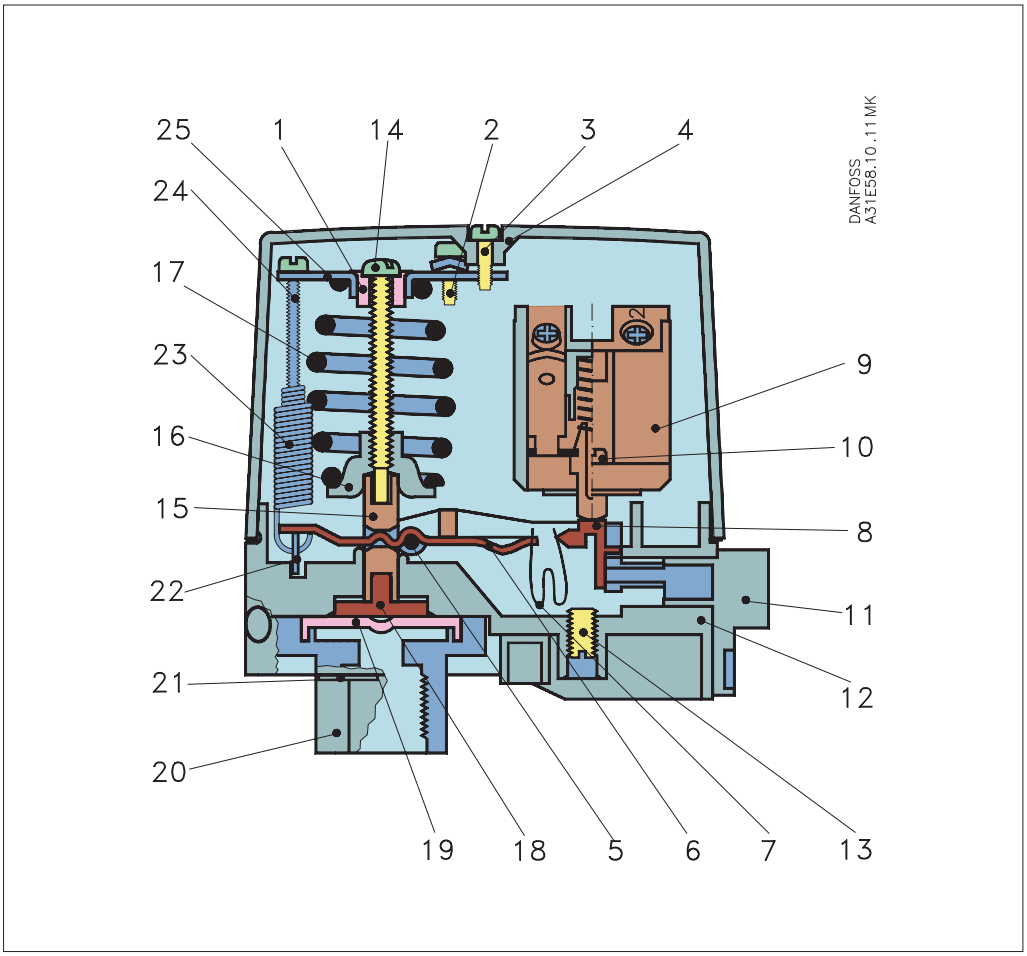

1. Slide ring
2. Earth screw
3. Cover screw
4. Cover
5. Spindle
6. Toggle arm
7. Snap spring
8. Snap arm
9. Switch housing assy
10. Self-tapping screw
11. Manual switch
12. Base
13. Grubscrew
14. Stop pressure screw
15. Pressure pad
16. Spring retainer
17. Compression spring
18. Pressure shoe
19. Diaphragm
20. Flange, G ¼ or G ½
21. Cap
22. Differential arm
23. Tension spring
24. Differential pressure screw
25. Bracket

The pressure switch is built up of the following main elements: connector, diaphragm, snap system, main spring, differential spring and a 3-pole or one-pole contact system.
The stop pressure must be set on the main spring and the difference between start and stop pressures on the differential spring.

Pressure from the controlled system is led, via the connector, to the diaphragm. The diaphragm converts this pressure to a mechanical movement which is transferred by the snap system to the contact system.
In this way, the contact system starts or stops a compressor/pump.

Setting

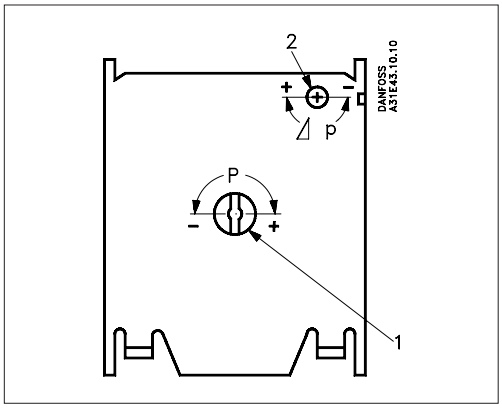

Note!
If the differential is set at a value greater than the stop pressure the plant cannot start. If this is the case, set the differential at a smaller value (towards minus).

All standard versions of CS pressure switches are preset and supplied with springs under minimum compression.

1. Turn the stop pressure screw (1) the given number of times towards + (high stop pressure), see stop pressure graph.
2. Turn the differential screw (2) the given number of times towards + (max. differential), see differential pressure nomogram.
3. Start the plant and let it run until the required stop pressure is reached.
4. Turn the stop pressure screw (1) towards minus (lower stop pressure) until the plant stops.
5. Reduce the pressure to the required start pressure.
6. Turn the differential screw (2) towards minus (smaller differential) until the plant starts.
7. Check that the plant stops and starts at the required pressures.

Stop pressure graph

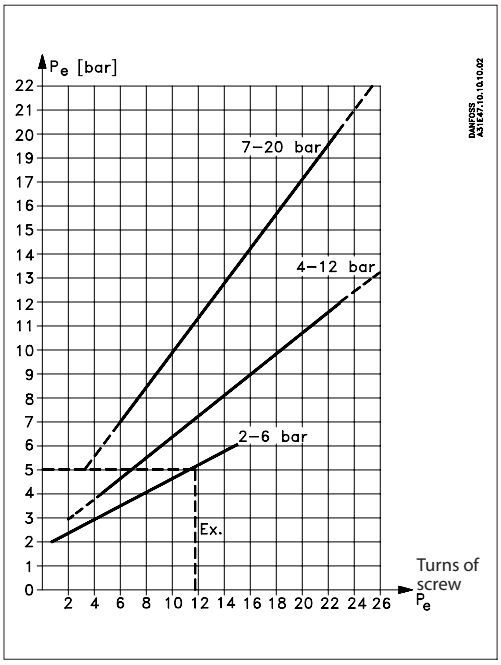

Example
A compressor is to be regulated by a CS pressure switch. The start pressure is 3.5 bar, and the stop pressure 5 bar. The choice should be a CS with a range of 2 – 6 bar.

1. Turn the stop pressure screw (1) about 12 times. See cut-off pressure graphs.
2. Turn the differential screw (2) about 4.5 times. See CS 2 – 6 nomogram.
   Take a straight line from 5 bar stop pressure on the nomogram to the differential, 1.5 bar and read off the number of turns, i.e. 4.5.

Take a straight line from 5 bar stop pressure on the nomogram to the differential, 1.5 bar and read off the number of turns, i.e. 4.5.

Mains connection

3-pole

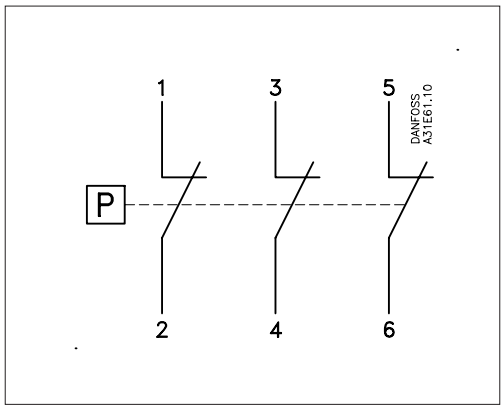

1-pole a.c. load

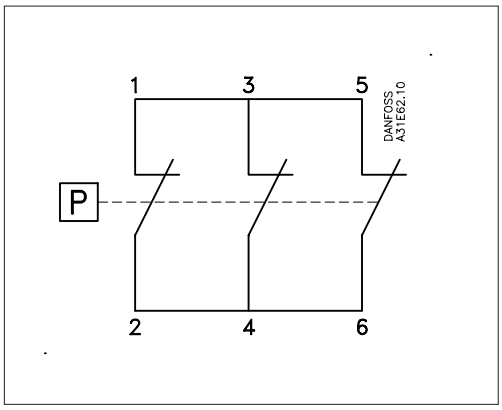

1-pole d.c. load

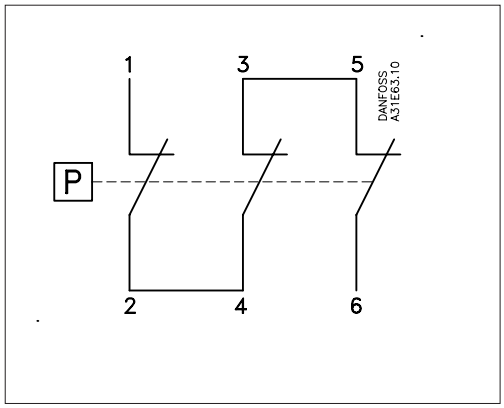

Contact load

	I_e	U_e
AC-3	12 A	220 V – 415 V
	9 A	600 V
DC-13 / 14	2 A	220 V (3 contacts in series)

Dimensions [mm] and weights [kg]

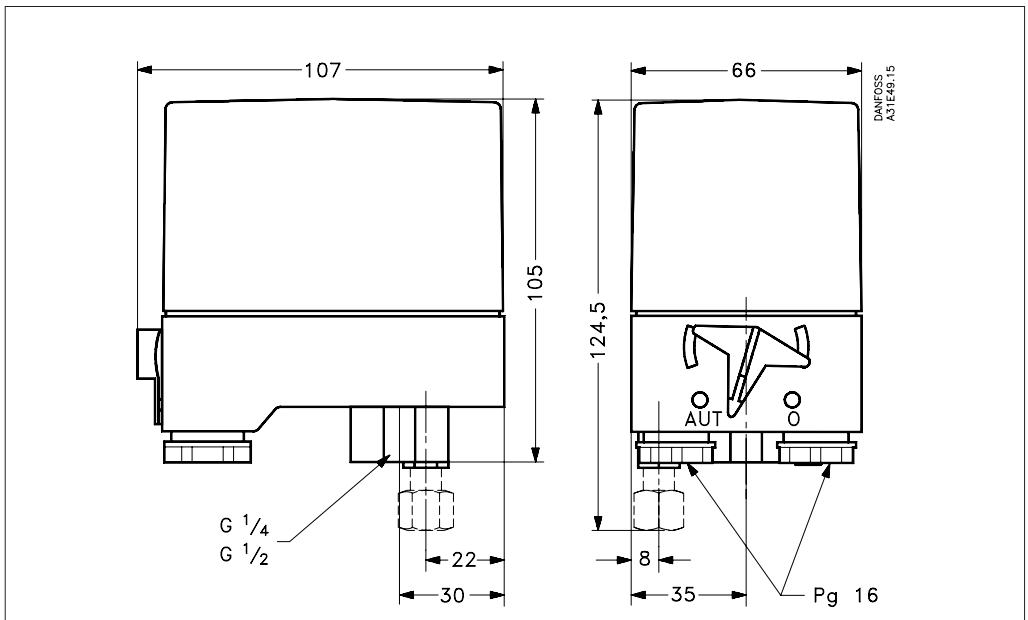

Weight approx. 0.5 kg

Installation

Recommended orientation
The pressure switches will operate regardless of their orientation. However, to meet the enclosure requirements of IP43 and IP55, they must be mounted vertically with the connection downwards. The CS pressure switches are self-supporting (on the connection).

Fitting a pressure relief valve
1. Remove the blanking plug
2. Fit the pressure relief valve
3. Fit the plastoform screw

Fitting screwed cable entries
The accessory bag contains two sets of metal gaskets each with different internal diameters. These will give a sufficient cord relief if used correctly with the cable diameter concerned.

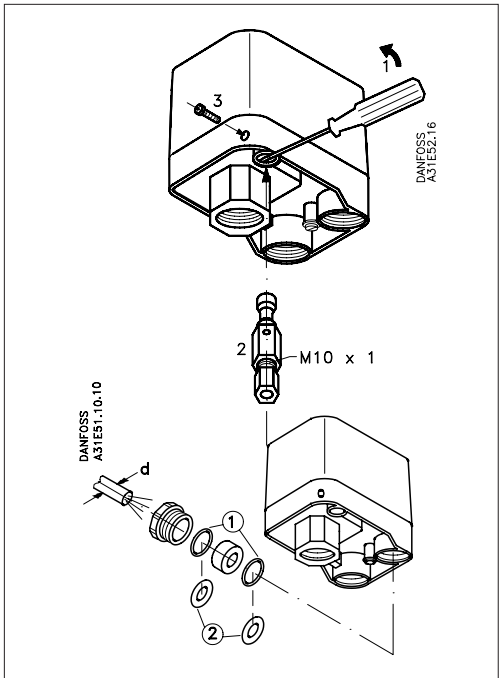

d > 8.5 mm – 1
d ≤ 8.5 mm – 2
031E0293

Drain hole
If because of large temperature variations there is a risk of condensate forming in the pressure switch, a screwdriver can be used to make a drain hole in the enclosure.

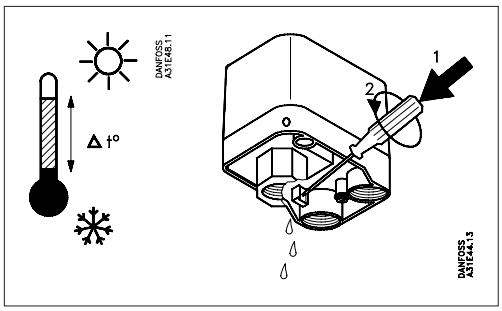

Differential pressure nomograms

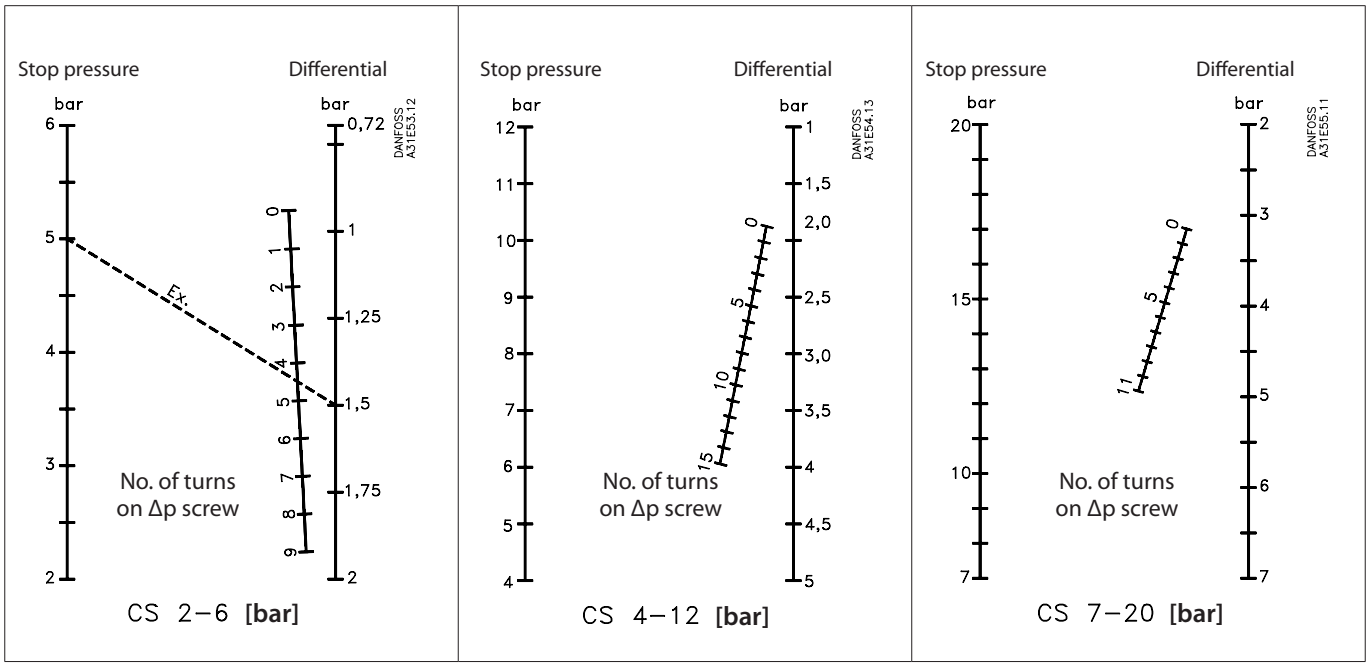

Application examples

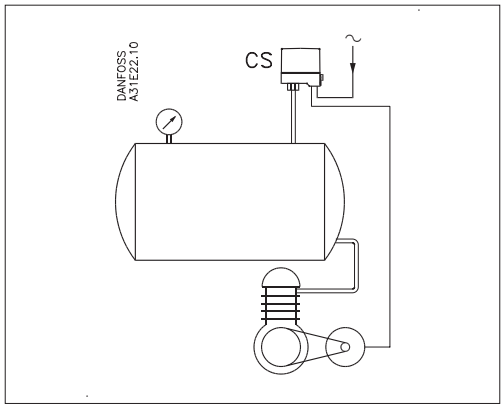

Example 1
Control of an air compressor with a CS pressure switch.

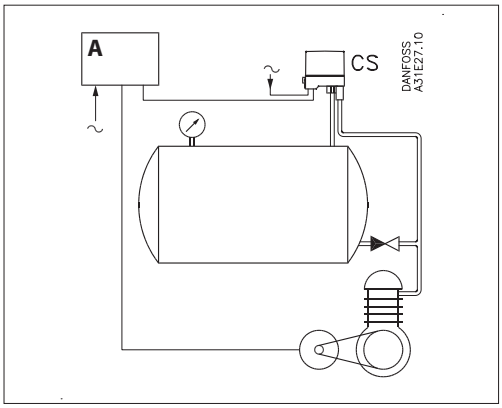

Example 2
Control of a compressor with a CS pressure switch fitted with pressure relief valve. Note the check valve between pressure relief line and reservoir.

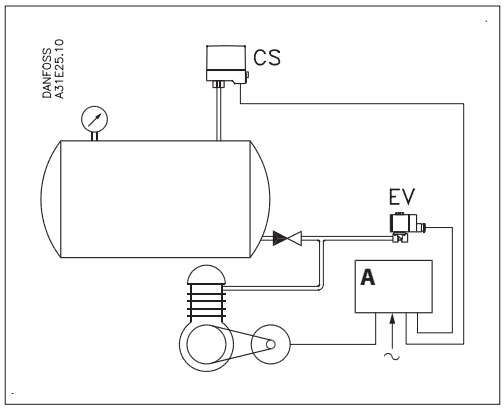

Example 3
Control of an air compressor with a CS. An EV210B 3B solenoid valve is recommended where there is need for especially fast pressure relief.

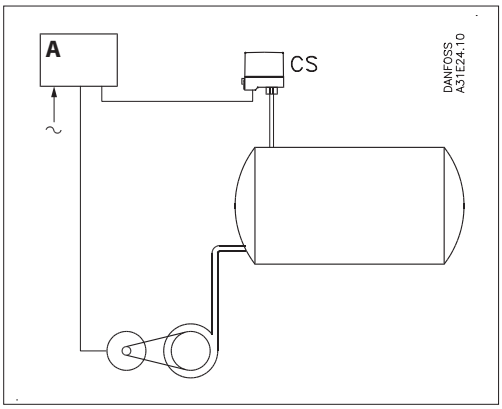

Example 4
Control of a centrifugal pump with a CS, via an automatic star-delta switch, motor starter, or similar.

A:
Motor starter or automatic start-delta switch

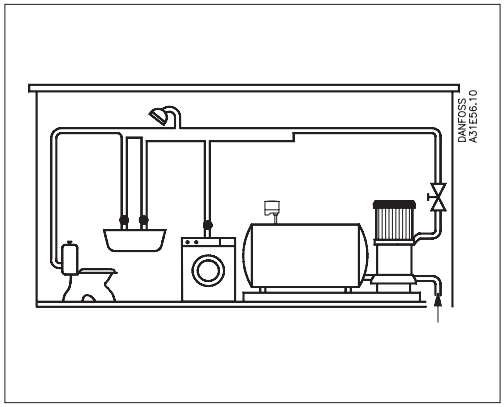

Example 5
Pressure boosting system for domestic circuits.
A type CS switch is used to start/stop the pump.

Danfoss can accept no responsibility for possible errors in catalogues, brochures and other printed material. Danfoss reserves the right to alter its products without notice. This also applies to products already on order provided that such alterations can be made without subsequential changes being necessary in specifications already agreed.
All trademarks in this material are property of the respective companies. Danfoss and the Danfoss logotype are trademarks of Danfoss A/S. All rights reserved.