ENGINEERING
TOMORROW

Data sheet

Pressure switch and Thermostat
KPS

The KPS Series consists of a series of pressure and temperature controlled switches. In this series, special attention has been given to meeting demands for a high level of enclosure, robust and compact construction, and resistance to shock and vibration.

For KPS pressure switches the position of the contacts depends on the pressure in the inlet connection and the set scale value.

For KPS thermostats the position of the contacts depends on the temperature of the sensor and the set scale value.

The series covers most outdoor as well as indoor application requirements and is suitable for use in monitoring alarm and control systems in factories, diesel plants, compressors, power stations and on board ships.

Features

- A high level of enclosure
- Adjustable differential
- Robust and compact construction
- Resistance to shock and vibration
- Available with all major marine approvals

Approvals

CE-marked in accordance with:
– LVD 2014/35/EU
(EN 60947-1, EN 60947-4-1, EN 60947-5-1)

Underwriters Laboratories Inc., US-UL (excluding KPS 39)
China Compulsory Certificate, CCC

Ship approvals

American Bureau of Shipping, ABS
Det Norske Veritas, DNV
Germanischer Lloyd, GL
Registro Italiano Navale, RINA (KPS 43, KPS 45, KPS 47, KPS 76, KPS 77, KPS 79, KPS 80, KPS 81, KPS 83)
Maritime Register of Shipping, RMRS

Nippon Kaiji Kyokai, NKK (KPS 31, KPS 33, KPS 35, KPS 37, KPS 39, KPS 43, KPS 45, KPS 47)
China Classification Society, CCS
Bureau Veritas, BV
Korean Register of Shipping, KR (KPS 35, KPS 37, KPS 39, KPS 43, KPS 45, KPS 47)
Lloyds Register of Shipping, LR

Overview

1. Standard pressure switches

[bar] -1	0	10	20	30	40	50	60	Range P_e [bar]	Type	Further information page
								0 – 2.5	**KPS 31**	3
								0 – 3.5	**KPS 33**	3
								0 – 8	**KPS 35**	3
								6 – 18	**KPS 37**	3
								10 – 35	**KPS 39**	3

2. Pressure switches for high pressure and strongly pulsating media

[bar] -1	0	10	20	30	40	50	60	Range P_e [bar]	Type	Further information page
								1 – 10	**KPS 43**	3
								4 – 40	**KPS 45**	3
								6 – 60	**KPS 47**	3

3. Thermostats

[°C] -50	0	50	100	150	200	200	Range P_e [°C]	Type	Further information page
							-10 – 30	**KPS 76**	11
							20 – 60	**KPS 77**	11
							50 – 100	**KPS 79**	11
							70 – 120	**KPS 80**	11
							60 – 150	**KPS 81**	11
							100 – 200	**KPS 83**	11

PRESSURE SWITCH

Technical data and ordering

KPS 31, KPS 33

KPS 35, KPS 37, KPS 39

1. Pressure switches

Type	Setting range P_e [bar]	Adjustable/ fixed differetial [bar]	Permissible operating pressure P_e [bar]	Max. test pressure [bar]	Pressure connection	Code no.
KPS 31	0 – 2.5	0.1	6	6	G $^1/_4$	**060-311066**
KPS 31	0 – 2.5	0.1	6	6	G $^3/_8$ A	**060-310966**
KPS 33	0 – 3.5	0.2	10	10	G $^1/_4$	**060-310466**
KPS 33	0 – 3.5	0.2	10	10	G $^3/_8$ A	**060-310366**
KPS 35	0 – 8	0.4 – 1.5	12	12	G $^1/_4$	**060-310566**
KPS 35	0 – 8	0.4 – 1.5	12	12	G $^3/_8$ A	**060-310066**
KPS 35	0 – 8	0.4	12	12	G $^1/_4$	**060-310866**
KPS 37	6 – 18	0.85 – 2.5	22	27	G $^1/_4$	**060-310666**
KPS 37	6 – 18	0.85 – 2.5	22	27	G $^3/_8$ A	**060-310166**
KPS 39	10 – 35	2.0 – 6	45	53	G $^1/_4$	**060-310766**
KPS 39	10 – 35	2.0 – 6	45	53	G $^3/_8$ A	**060-310266**

KPS 43, KPS 45, KPS 47

When ordering, please state type and code number

2. Pressure switches for high pressure and strongly pulsating media

Type	Setting range P_e [bar]	Adjustable diff. see also figs. 1, 2, and 3 [bar]	Permissible overpressure [bar]	Max. test pressure [bar]	Min. burst pressure [bar]	Pressure connection	Code no.
KPS 43	1 – 10	0.7 – 2.8	120	180	240	G $^1/_4$	**060-312066**
KPS 45	4 – 40	2.2 – 11	120	180	240	G $^1/_4$	**060-312166**
KPS 47	6 – 60	3.5 – 17	120	180	240	G $^1/_4$	**060-312266**

Terminology

Range setting
The pressure range within which the unit will give a signal (contact changeover).

Differential
The difference between make pressure and break pressure (see also fig. 5 & 6, page 6).

Permissible overpressure
The highest permanent or recuiring pressure the unit can be loaded with.

Max. test pressure
The highest pressure the unit may be subjected to when, for example, testing the system for leakage. Therefore, this pressure must not occur as a recurring system pressure.

Min. bursting pressure
The pressure which the pressure-sensitive element will withstand without leaking.

Technical data and ordering
(continued)

Switch	Single pole changeover (SPDT)	Contact material: Gold-plated silver contact	
Contact load (when Au surface is burnt away)	Alternating current	Ohmic	10 A, 440 V, AC-1
		Inductive	6 A, 440 V, AC-3
			4 A, 440 V, AC-15
		Starting current	max. 50 A (locked rotor)
	Direct current	12 W, 220 V, DC-13, see curve, fig. 4, page 5	
Ambient temperature	KPS 31 – 39	-40 – 70 °C	
	KPS 43 – 47	-25 – 70 °C	
Temperature of medium [1]	KPS 31 – 39	-40 – 100 °C	
	KPS 43 – 47	-25 – 100 °C	
Vibration resistance	Vibration-stable in the range 2 – 30 Hz, amplitude 1.1 mm og 30 – 300 Hz, 4 g.		
Enclosure	IP67 (including IPX6) according to EN 60529. The pressure switch housing is enamelled pressure die cast aluminium (GD-AlSi 12). The cover is fastened by four screws which are anchored to prevent loss. The enclosure can be sealed with wire.		
Cable entry	Pg 13.5 for cable diameters from 5 – 14 mm.		
Identification	The type designation and code no. of the unit is stamped in the side of the housing.		

[1] For water and seawater, max. 80 °C.

Types	Scale accuracy [bar]	Mean value of snap point variation after 400 000 operations [bar]
KPS 31	±0.2	±0.1
KPS 33	±0.3	±0.2
KPS 35	±0.5	±0.3
KPS 37	±1.0	±0.4
KPS 39	±3.0	±0.7
KPS 43	±1.0	±0.2
KPS 45	±4.0	±1.0
KPS 47	±6.0	±1.5

Materials in contact with the medium

Type	Materials	
KPS 31, KPS 33	Bellows capsule	Deep-drawn plate, material no. 1.0524 (DIN 1624)
	Bellows	Stainless steel, material no. 1.4306 (DIN 17440)
	Pressure connection	Steel C20, material no. 1.0420 (DIN 1652)
KPS 35, KPS 37, KPS 39	Bellows	Stainless steel, material no. 1.4306 (DIN 17440)
	Pressure connection	Brass, W. no. 2.0401 (DIN 17660)
KPS 43, KPS 45, KPS 47	Diaphragm capsule	Nickel-plated brass, DIN 50 968 Cu/Ni 5 (DIN 1756)
	Diaphragm	Nitrile-Butadien rubber

Technical data and ordering
(continued)

KPS 43

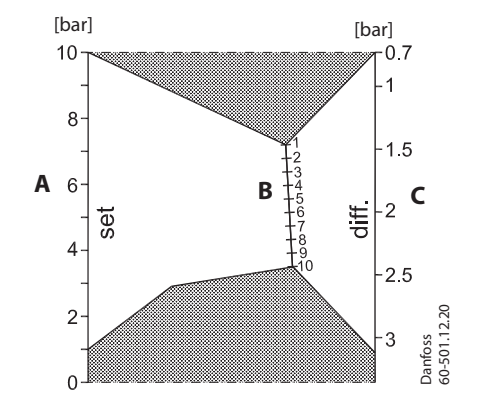

Fig. 1

KPS 45

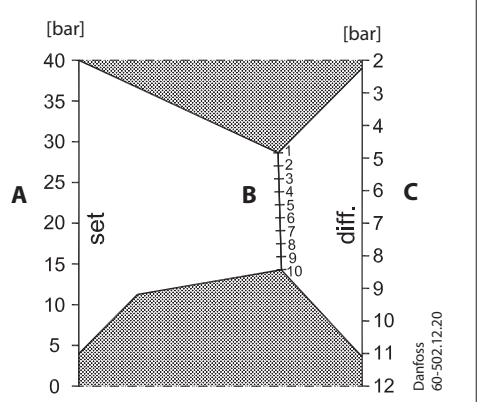

Fig. 2

KPS 47

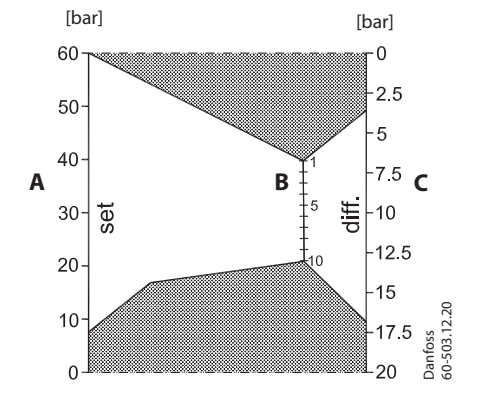

Fig. 3

A: *Range setting*
B: *Differential scale*
C: *Obtained differential*

Direct current (DC) -load

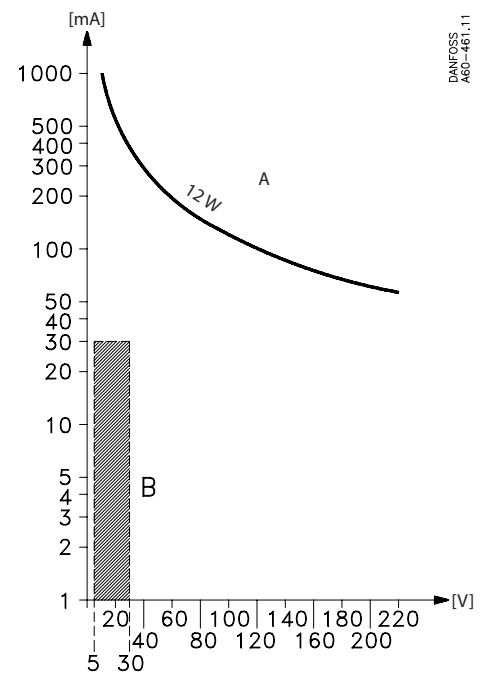

Fig. 4

Curve A:
gives the maximum load

Hatched area B:
Acceptable load for the gold plating of the contact

Function

1. KPS 31
Contacts 1-2 make and contacts 1-4 break when the pressure falls under the set range value.
The contacts changeover to their initial position when the pressure again rises to the set range value plus the differential (see fig. 5).

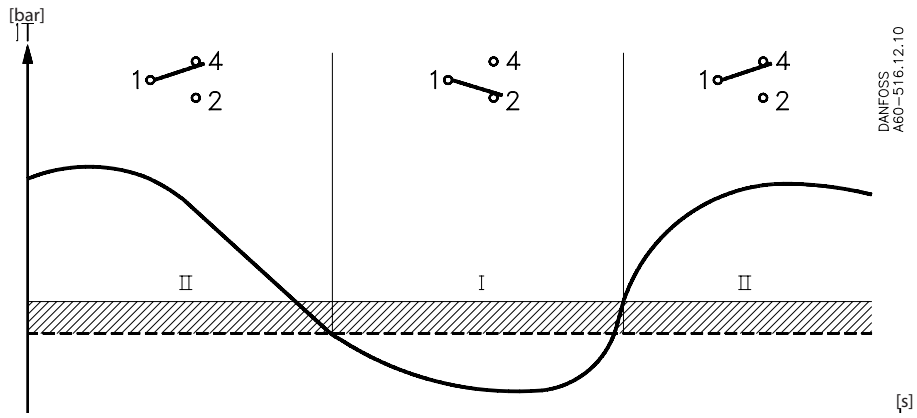

Scale setting
Mechanical differential

Fig. 5

I. *Alarm for falling pressure given at the set range value*
II. *Alarm for rising pressure given at the set range value plus the differential.*

2. All other KPS pressure SWITCHES
Contacts 1-4 make and contacts 1-2 break when the pressure rises above the set range value.
The contacts changeover to their initial position when the pressure again fails to the range value minus the differential (see fig. 6).

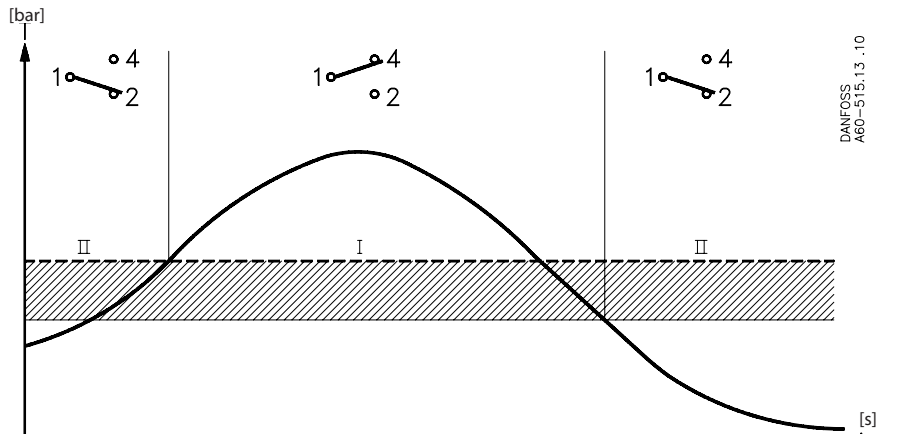

Scale setting
Mechanical differential

Fig. 6

I. *Alarm for rising pressure given at the set range value*
II. *Alarm for falling pressure given at the set range value minus the differential*

Function
(continued)

KPS 45

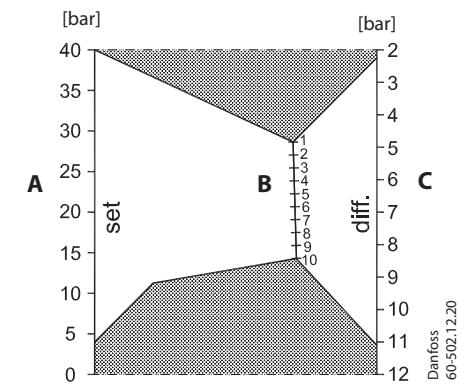

Fig. 7

Example 1
An alarm must be given when the lubricating oil pressure in an engine falls below 0.8 bar. The alarm is in the form of a lamp.
Choose a KPS 31 (range 0 – 2.5 bar).
The minimum permissible lubricating oil pressure of 0.8 bar must be set on the range spindle.
The differential is fixed at 0.1 bar, i.e. the alarm will not cut out before the pressure rises to 0.9 bar. The lamp must be connected to terminals 1 and 2 in the pressure switch.

Example 2
An alarm must be given by a bell when the pressure in a boiler rises to 10 bar. The normal operating pressure is 9 bar.
Choose a KPS 37 (range 6 – 18 bar).
The range value of the pressure switch must be set at 10 bar, the differential at 1 bar.
The bell must be connected to terminals 1 and 4.

Example 3
The pressure in a start air reservoir must be regulated with a compressor controlled by a KPS pressure switch so that it lies between 30 and 36 bar.
Choose a KPS 45 (range 4 – 40 bar).
The range value must be set at 36 bar.
The differential of 6 bar must be set in accordance with the nomogram, fig. 7, at approx. 2 on the differential scale.
The required start function is obtained by connection to terminals 1 and 2 in the pressure switch.

Dimensions [mm] and weights [kg]

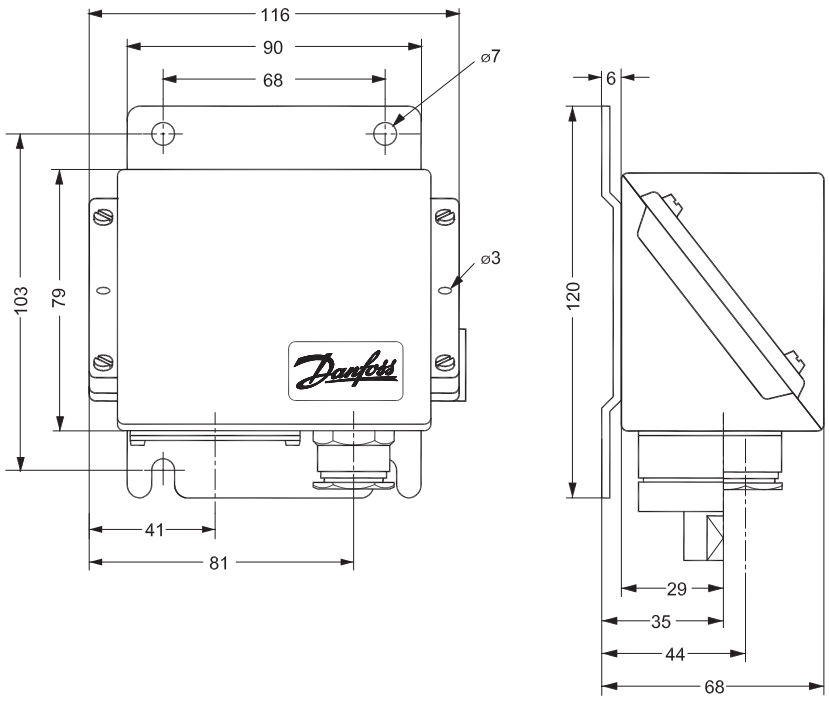

Net weight:
KPS 31 – 39 approx. 1.0 kg
KPS 43 – 47 approx. 1.3 kg

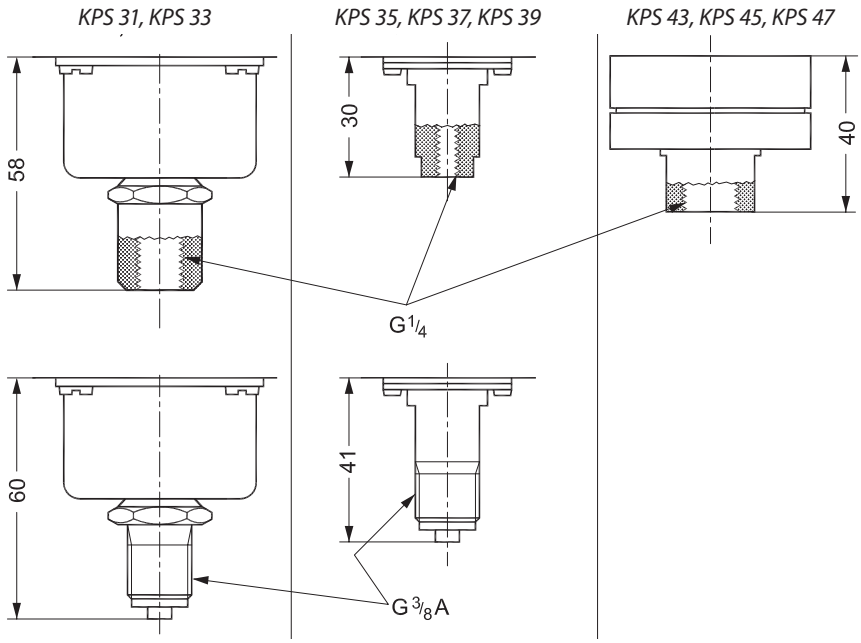

Accessories

Part		Description	Code no.
Connector with nipple		G $^{3}/_{8}$ connector, nipple and washer (10 mm o.d. × 6.5 mm i.d.) for brazing	**017-436866**
Connector with nipple		G $^{3}/_{8}$ connector, nipple and washer (10 mm o.d. × 6.5 mm i.d.) for welding	**017-422966**
Reducer	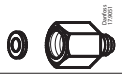	G $^{3}/_{8}$ × $^{7}/_{16}$ – 20 UNF ($^{1}/_{4}$ flare) reduction with washer	**017-420566**
Adapter		G $^{3}/_{8}$ × $^{1}/_{8}$ – 27 NPT with washer	**060-333466**
Nipple		G $^{3}/_{8}$ o.d × $^{7}/_{16}$ – 20 UNF ($^{1}/_{4}$ flare)	**060-324066**
Nipple		G $^{3}/_{8}$ A – $^{1}/_{4}$ NPT with washer	**060-333566**
Adapter		G $^{3}/_{8}$ × $^{1}/_{4}$ – 18 NPT with washer	**060-333666**
Nipple		G $^{1}/_{4}$ A × G $^{3}/_{8}$ A	**060-333266**
		G $^{1}/_{4}$ A x o.d. M10 × 1 with washer	**060-333866**
Damping coil	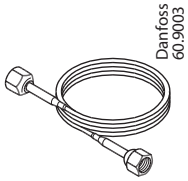	Damping coil with $^{1}/_{4}$ flare connectors and 1 m copper capillary tube. Damping coils used for applications with $^{3}/_{8}$ RG connector requires the use of reducer. For informations about capillary tube lengths, please contact Danfoss.	**060-017166**
Damping coil	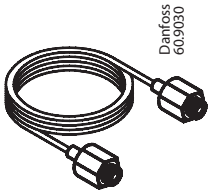	Damping coil with G $^{3}/_{8}$ connectors and 1.5 m copper capillary tube	**060-104766**
Armoured damping coil	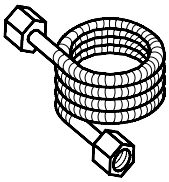	Damping coil with G $^{3}/_{8}$ connectors and 1 m armoured copper capillary tube. Standard washers included.	**060-333366**

Installation

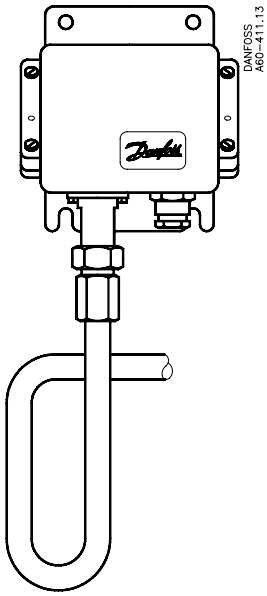

Fig. 8

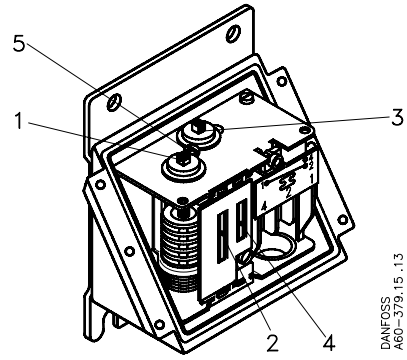

Fig. 9

1. Range spindle
2. Range scale
3. Differential spindle
4. Differential scale
5. Locking screw

Installation
KPS pressure switches are fitted with a 3 mm steel mounting plate. The units should not be allowed to hang from the pressure connection.

Pressure connection
When fitting or removing pressure lines, the spanner flats on the pressure connection should be used to apply counter-torque.

Steam plant
To protect the pressure element from excessive heat, the insertion of a water-filled loop is recommended. The loop can, for example, be made of 10 mm copper tube as shown in fig. 8.

Water systems
Water in the pressure element is not harmful, but if frost is likely to occur a water-filled pressure element may burst. To prevent this happening, the pressure control can be allowed to operate on an air cushion.

Media-resistance
See table of materials in contact with the medium, page 4. If seawater is involved, types KPS 43, KPS 45, KPS 47 are recommended.

Pulsations
If the pressure medium is superimposed with severe pulsations, which occur in automatic sprinkler systems (fire protection), fuel systems for diesel motors (priming lines), and hydraulic systems (e.g. propeller systems), etc., types KPS 43, KPS 45, KPS 47 are recommended. The maximum permissible pulsation level for these types is 120 bar.

Setting
When the pressure switch cover is removed, and the locking screw (5) is loosened, the range can be set with the spindle (1) while at the same time the scale (2) is being read. In units having an adjustable differential, the spindle (3) must be used to make the adjustment. The differential obtained can be read direct on the scale (4) or, with types KPS 43, KPS 45, KPS 47, can be determined by reading the scale value and using the nomograms in figs. 1, 2, 3 (page 5). The working line for determining the differential must not intersect the shaded areas in the nomograms.

Selection of differential
To ensure that the plant functions properly, a suitable differential pressure is necessary. Too small a differential will give rise to short running periods with a risk of hunting. Too high a differential will result in large pressure oscillations.

Electrical connection
KPS pressure switches are fitted with a Pg 13.5 screwed cable entry that is suitable for cable diameters from 5 – 14 mm.
Contact function is shown in fig. 10.

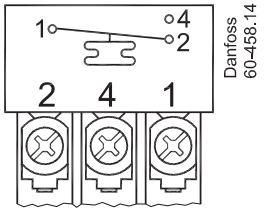

Fig. 10

THERMOSTAT

Technical data and ordering

KPS with rigid sensor

KPS with remote sensor

KPS with remote sensor and armoured capillary tube

When ordering, please state type and code number

Type	Setting range P_e	Mech. diff. adjust-able/ fixed	Max. sensor temp.	Suitable sensor pocket length see also "Accessories"				Cap. tube length	Code no.		
	[°C]	[°C]	[°C]	[mm]				[m]	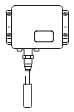	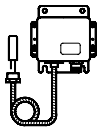	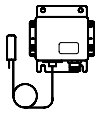
KPS 76	-10 – 30	3 – 10	80	65	75	110	160	2	—	**060L311266**	**060L311366**
KPS 77	20 – 60	3 – 14	130	—	75	—	—	—	**060L311866**	—	—
KPS 77	20 – 60	3 – 14	130	—	—	110	—	—	**060L310066**	—	—
KPS 77	20 – 60	3 – 14	130	—	—	—	160	—	**060L313666**	—	—
KPS 77	20 – 60	3 – 14	130	65	75	110	160	2	—	**060L310166**	**060L310266**
KPS 77	20 – 60	3 – 14	130	—	—	110	160	5	—	**060L311966**	—
KPS 79	50 – 100	4 – 16	200	—	75	—	—	—	**060L312166**	—	—
KPS 79	50 – 100	4 – 16	200	—	—	110	—	—	**060L310366**	—	—
KPS 79	50 – 100	4 – 16	200	—	—	—	160	—	**060L313766**	—	—
KPS 79	50 – 100	4 – 16	200	65	75	110	160	2	—	**060L310466**	**060L310566**
KPS 79	50 – 100	4 – 16	200	—	—	110	160	5	—	**060L312266**	—
KPS 79	50 – 100	4 – 16	200	—	—	110	160	8	—	**060L312466**	—
KPS 79	50 – 100	4 – 16	200	65	75	110	160	3	—	**060L314366**	—
KPS 80	70 – 120	4.5 – 18	220	—	75	—	—	—	**060L312666**	—	—
KPS 80	70 – 120	4.5 – 18	220	—	—	110	—	—	**060L312766**	—	—
KPS 80	70 – 120	4.5 – 18	220	—	—	—	160	—	**060L313866**	—	—
KPS 80	70 – 120	4.5 – 18	220	—	—	—	200	—	**060L315766**	—	—
KPS 80	70 – 120	4.5 – 18	220	65	75	110	160	2	—	**060L312866**	**060L312966**
KPS 80	70 – 120	4.5 – 18	220	65	75	110	160	3	—	**060L315666**	—
KPS 80	70 – 120	4.5 – 18	220	—	—	110	160	5	—	**060L313066**	—
KPS 80	70 – 120	4.5 – 18	220	—	—	110	160	8	—	**060L313266**	—
KPS 81	60 – 150	5 – 25	250	65	75	110	160	2	—	**060L310666**	**060L310766**
KPS 81	60 – 150	5 – 25	250	—	—	110	160	5	—	**060L313466**	—
KPS 81	60 – 150	5 – 25	250	—	—	110	160	8	—	**060L311166**	—
KPS 81	60 – 150	5 – 25	250	—	—	200	—	—	**060L311066**	—	—
KPS 83	100 – 200	6.5 – 30	300	65	75	110	160	2	—	**060L310866**	**060L310966**
KPS 83	100 – 200	18	300	65	75	110	160	2	—	**060L313966** [1]	—

Electrical connection

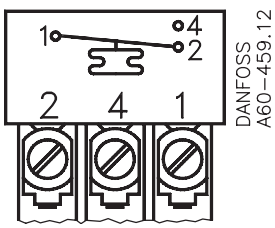

Fig. 11

KPS thermostats are fitted with a Pg 13.5 screwed cable entry suitable for cables from 5 – 14 mm. Contact function is shown in fig. 11

Technical data

Switch	Single pole changeover (SPDT)	Contact material: Gold-plated silver contact	
Contact load (when Au surface is burnt away)	Alternating current	Ohmic	10 A, 440 V, AC-1
		Inductive	6 A, 440 V, AC-3
			4 A, 440 V, AC-15
		Starting current	max. 50 A (locked rotor)
	Direct current	12 W, 220 V, DC-13, see fig. 12	
Ambient temperature	-40 – 70 °C		
Vibration resistance	Vibration-stable in the range 2 – 30 Hz, amplitude 1.1 mm og 30 – 300 Hz, 4 G.		
Enclosure	IP67 to EN 60529 / IEC 60529. The thermostat housing is enamelled pressure die cast aluminium (GID-AlSI 12). The cover is fastened by four screws which are anchored to prevent loss. The enclosure can be sealed with fuse wire.		
Cable entry	Pg 13.5 for cable diameters from 5 – 14 mm.		
Identification	The type designation and code no. of the unit is stamped in the side of the housing.		

Types	Scale accuracy *) [°C]	Snap point variation after 400 000 operations [°C]
KPS 76	±3	max. drift 2
KPS 77	±3	max. drift 2
KPS 79	±3	max. drift 2
KPS 80	±3	max. drift 2
KPS 81	±6	max. drift 2
KPS 83	±6	max. drift 2

*) Scale values are indicative only. Results given in table are measured in laboratory conditions for factory set values (scale center). The scale accuracy for min and max positions could differ significantly. There are many factors which could influence on product working and scale accuracy.

Direct current (DC) -load

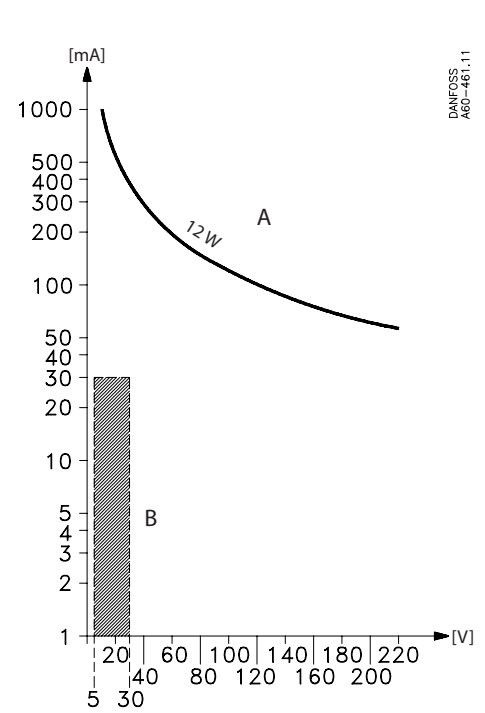

Fig. 12

Curve A:
gives the maximum load

Hatched area B:
Acceptable load for the gold plating of the contact

Function

Selection of differential

To ensure that the plant functions properly, a suitable differential is necessary. Too small a differential will give rise to short running periods with a risk of hunting. Too high a differential will result in large temperature variations.

Differentials

The mechanical differential is the differential that is set by the differential spindle in the temperature control. The thermal differential (operating differential) is the differential the system operates on.

The thermal differential is always greater than the mechanical differential and depends on three factors:
1) the flow velocity of the medium,
2) the temperature change rate of the medium,
3) the heat transmission to the sensor.

Thermostat function

Contacts 1-4 make while contacts 1-2 break when the temperature rises above the scale setting. The contacts changeover to their initial position when the temperature falls to the scale setting minus the differential. See fig. 13.

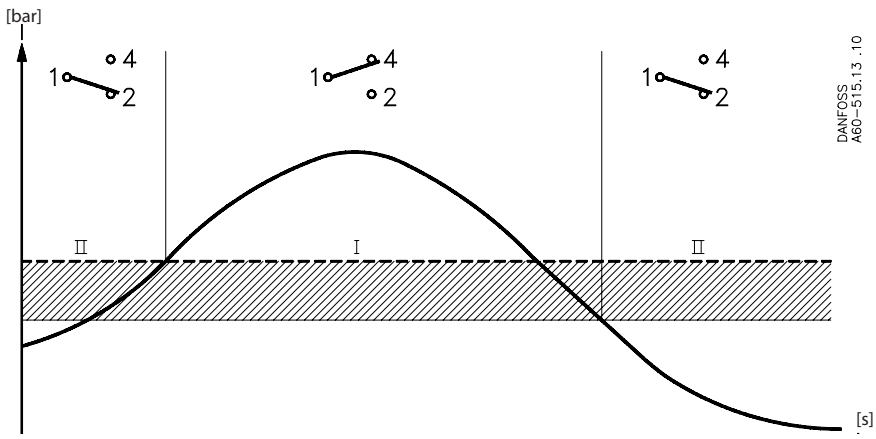

Scale setting
Mechanical differential

Fig. 13

I. *Alarm for rising pressure given at the set range value*

II. *Alarm for falling pressure given at the set range value minus the differential*

Dimensions [mm] and weights [kg]

KPS with remote sensor

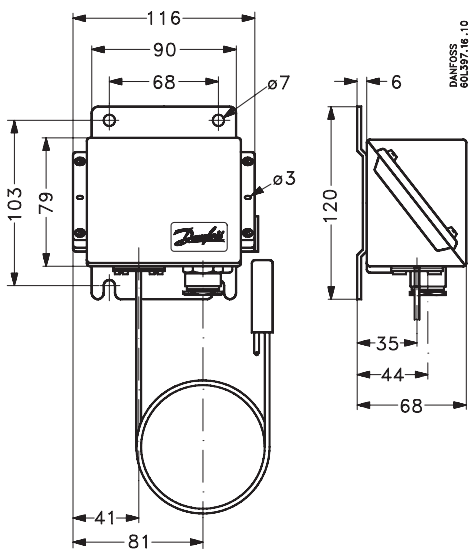

Net weight: ca 1.2 kg (incl. 2 m capillary tube)

KPS with remote sensor and armoured capillary tube

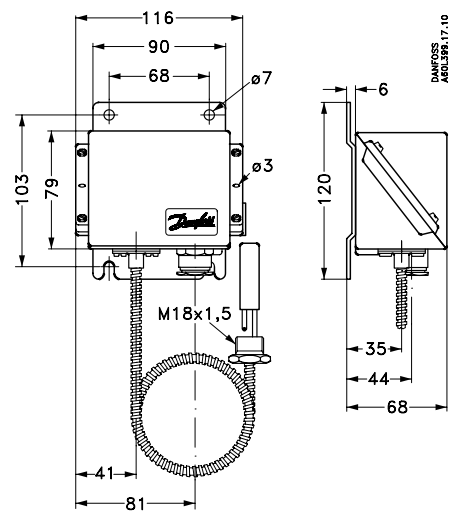

Net weight: ca 1.4 kg (incl. 2 m capillary tube)

KPS with rigid sensor

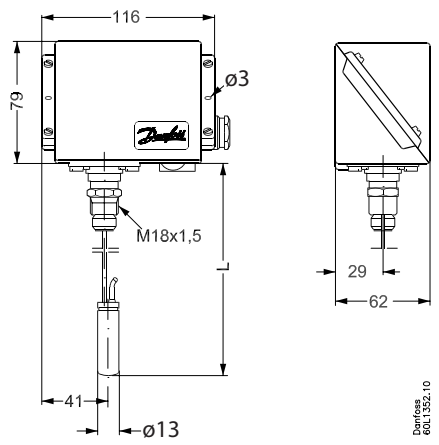

Net weight: ca 1.0 kg

Sensor pocket length "A"	Sensor length "L"
75	105
110	138
160	190
200	230

Accessories

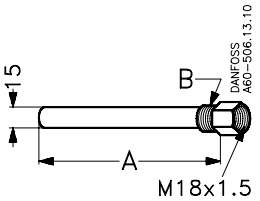

Supplied without gland nut, gaskets and washer

Brass sensor pocket			Steel 18/8 sensor pocket		
A [mm]	B Thread	Code no.	A [mm]	B Thread	Code no.
65	1/2 NPT	**060L326566**	—	—	—
75	1/2 NPT	**060L326466**	75	G 1/2 A	**060L326766**
75	G 1/2 A	**060L326266**	—	—	—
75	G 3/4 A	**060L326666**	—	—	—
75	G 1/2 A (ISO 228/1)	**060L328166**	—	—	—
110	1/2 NPT	**060L328066**	110	G 1/2 A	**060L326866**
110	G 1/2 A	**060L327166**	110	1/2 NPT	**060L327066**
110	G 1/2 A (ISO 228/1)	**060L340666**	—	—	—
110	G 3/4 A (ISO 228/1)	**060L340366**	—	—	—
160	G 1/2 A	**060L326366**	160	G 1/2 A	**060L326966**
200	G 1/2 A	**060L320666**	—	—	—
200	G 1/2 A (ISO 228/1)	**060L340866**	—	—	—
250	G 1/2 A	**060L325466**	—	—	—
330	G 1/2 A	**060L325566**	—	—	—

Part		Description	Code no.
Clamping band	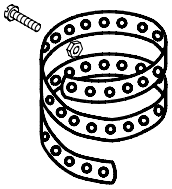	For KPS thermostats with remote sensor (L = 392 mm)	**017-420466**
WHeat-conductive compound (4.5 cm² tube)	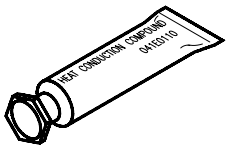	For KPS thermostats with sensor fitted in a sensor pocket. Compound for filling sensor pocket to improve heat transfer between pocket and sensor. Application range for compound: between pocket and sensor. Application range for compound: -20 – 150 °C, momentarily up to 220 °C.	**041E0114**
Gasket set		For KPS thermostats without armoured capillary tubes	**060L327366**
Gasket set	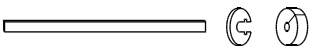	For KPS thermostats with armoured capillary tubes	**060L036666**

Installation

Installation
Location of unit: KPS thermostats are designed to withstand the shocks that occur, e.g. in ships, on compressors and in large machine installations. KPS thermostats with remote sensor are fitted with a base of 3 mm steel plate for fixing to bulkheads, etc. KPS thermostats with bulb sensor are self-supporting from the sensor pocket.

Resistance to media
Material specifications for sensor pockets:

Sensor pocket, brass
The tube is made of Ms 72 to DIN 17660, the threaded portion of So Ms 58Pb to DIN 17661.

Sensor pocket, stainless steel 18/8
Material designation 1.4305 to DIN 17440.

Sensor position
As far as possible the sensor should be positioned so that its longitudinal axis is at right angles to the direction of flow. The active part of the sensor is ø13 mm × 50 mm long on thermostats with rigid sensors and 2 m capillary tube. The active length on the other thermostats is 70 mm (5 m and 8 m capillary tubes).

The medium
The fastest reaction is obtained from a medium having high specific heat and high thermal conductivity. It is therefore advantageous to use a medium that fulfills these conditions (provided there is a choice).
Flow velocity of the medium is also of significance. (The optimum flow velocity for liquids is about 0.3 m/s).
For permissible media pressure see fig. 14.

Permissible media pressure on the sensor pocket as a function of temperature

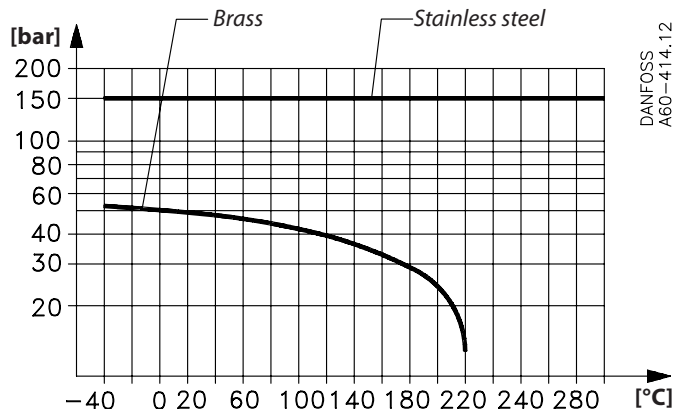

Fig. 14

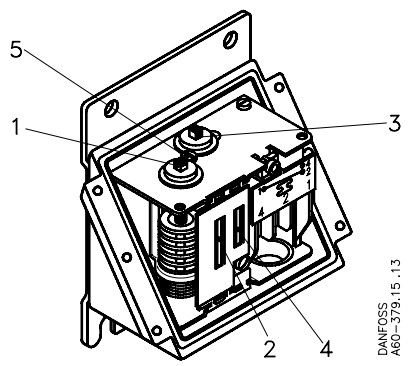

Fig. 15

Setting
When the thermostat cover is removed, and the locking screw (5, fig. 15) is loosened, the range can be set with the spindle (1) while at the same time the scale (2) is being read.
In units having an adjustable differential, the spindle (3) can be used while the scale (4) is being read.

1. Range spindle
2. Range scale
3. Differential spindle
4. Differential scale
5. Locking screw

Installation
(continued)

Scale correction
The sensor on KPS thermostats contains an adsorption charge. Therefore function is not affected whether the sensor is placed warmer or colder than the remaining part of the thermostatic element (bellows and capillary tube). However, such a charge is to some extent sensitive to changes in the temperature and bellows and capillary tube. Under normal conditions this is of no importance, but if the temperature control is to be used in extreme ambient temperatures there will be a scale deviation.

The deviation can be compensated for as follows:
Scale correction = Z × a
Z can be found from fig. 16, while a is the correction factor from the table below.

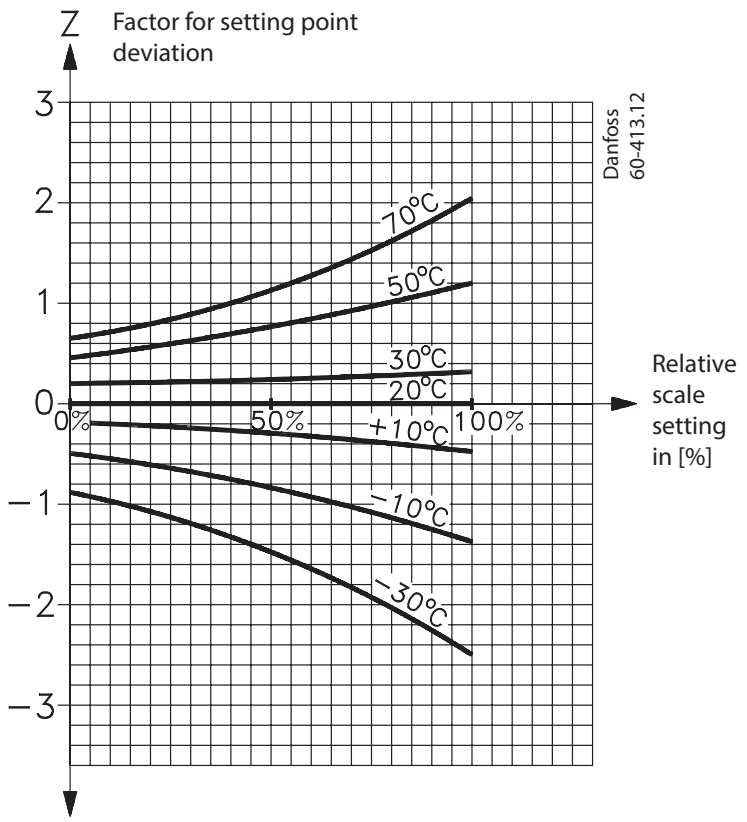

Fig. 16

Type	Regulation range [°C]	Correction factor a for thermostats		
		with rigid sensor	with 2 and 5 m cap. tube	with 8 m cap. tube
KPS 76	-10 – 30	—	1.1	—
KPS 77	20 – 60	1.0	1.4	—
KPS 79	50 – 100	1.5	2.2	2.9
KPS 80	70 – 120	1.7	2.4	3.1
KPS 81	60 – 150	—	3.7	—
KPS 83	100 – 200	—	6.2	—

Examples

Example 1
A diesel engine with cooling water temperature of 85 °C (normal). An alarm must be triggered if the cooling water temperature exceeds 95 °C.
Choose a KPS 80 thermostat (range 70 – 120 °C).
Main spindle setting: 95 °C.
Differential spindle setting: 5 °C.
The required alarm function is obtained by connecting to thermostat terminals 1-4. After the system has been in operation, assess the operating differential and make a correction if necessary.

Example 2
Find the necessary scale correction for a KPS 80 set at 95 °C in 50 °C ambient temperature. The relative scale setting Z can be calculated from the following formula:

$$\frac{\textit{Setting value-min. scale value}}{\textit{max. scale value-min. scale value}} \times 100 = \%$$

$$\textit{Relative scale setting:} \quad \frac{95-70}{120-70} \times 100 = 50\%$$

Factor for scale deviation Z (fig. 16 page 17), Z ≈ 0.7
Correction factor a (table under fig. 16 page 17) = 2.4
Scale correction = Z×a = 0.7×2.4 = 1.7 °C
The KPS must be set at 95+1.7 = 96.7 °C

Danfoss can accept no responsibility for possible errors in catalogues, brochures and other printed material. Danfoss reserves the right to alter its products without notice. This also applies to products already on order provided that such alterations can be made without subsequential changes being necessary in specifications already agreed.
All trademarks in this material are property of the respective companies. Danfoss and the Danfoss logotype are trademarks of Danfoss A/S. All rights reserved.