Temperature regulator
DN 15 - 100

ARI-TEMPTROL®
Thermal closing valve straight through with flanges

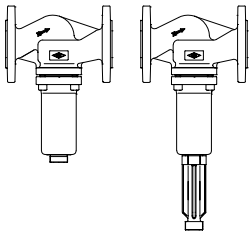

Fig. 771 Fig. 772 Page 2

ARI-TEMPTROL® LCG
Thermal closing valve straight through with screwed sockets without balanced bellow

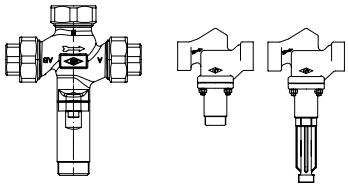

Fig. 771....2..1 Fig. 771/772....2..1

Page 4

ARI-TEMPTROL®
Thermal opening valve straight through with flanges

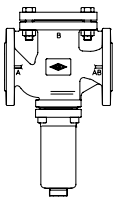

Fig. 775

Page 6

ARI-TEMPTROL® LCG
Thermal opening valve straight through with screwed sockets without balanced bellow

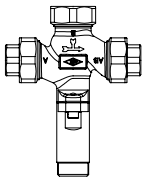

Fig. 775....2..1

Page 8

ARI-TEMPTROL®
Thermal mixing/diverting valve 3-way form with flanges

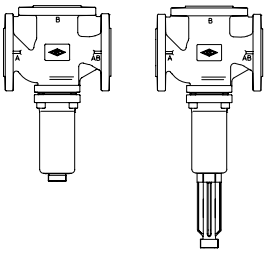

Fig. 773 Fig. 774 Page 10

ARI-TEMPTROL® LCG
Thermal mixing/diverting valve 3-way form with screwed sockets without balanced bellow

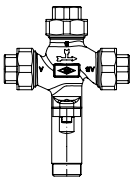

Fig. 773....2..1

Page 12

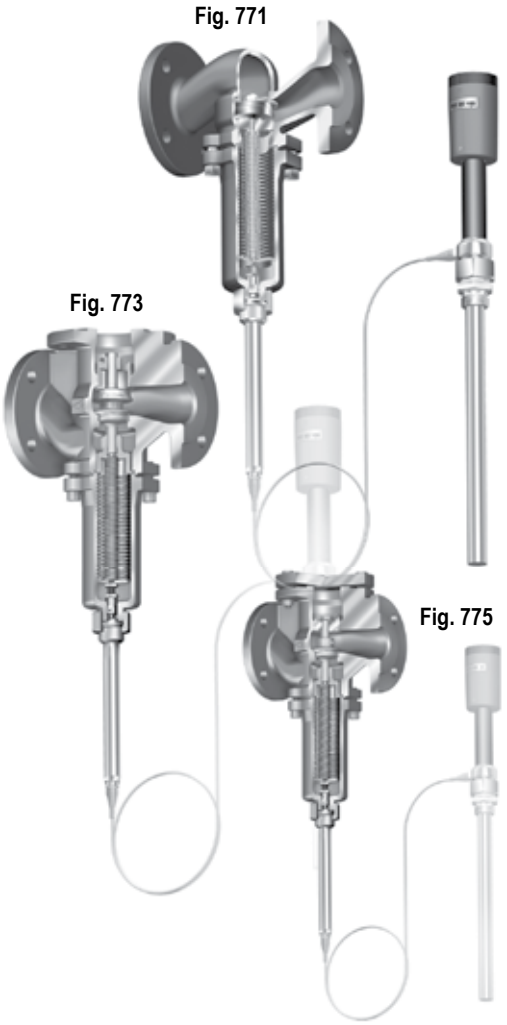

- TÜV-approval acc. to DIN EN 14597 / Reg.-No. TR910/TW911
- Approved through Germanischen Lloyd

Features:

- Self-operating (no auxilary power required)
- Reliable, low maintenance operation
- Over-temperature safety device
- Valves pressure balanced with stainless steel bellows
- 3 thermal controller sizes for optimal selection of proportional range
- Thermal sensors with different time constants
- Exact and easy adjustment
- Setting range is adjustable
- Sensor pocket
- Manual control device

Thermal-closing valve - straight through with flanges

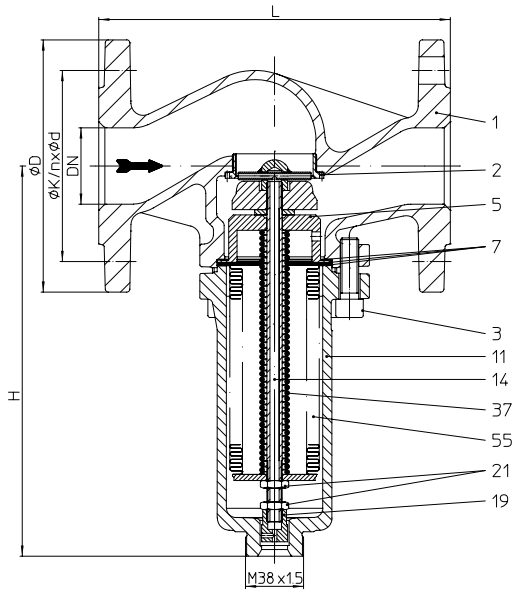

Fig. ...771 max. 150°C

Figure	Nominal pressure	Material	Nominal diameter
12.771 / 12.772	PN16	EN-JL1040	DN15-100
22.771 / 22.772	PN16	EN-JS1049	DN15-100
23.771 / 23.772	PN25	EN-JS1049	DN15-100
35.771 / 35.772	PN40	1.0619+N	DN15-100
55.771 / 55.772	PN40	1.4408	DN15-100

Construction LC without balanced bellow

Figure	Nominal pressure	Material	Nominal diameter
12.771....1..1 12.772....1..1	PN16	EN-JL1040	DN15-50

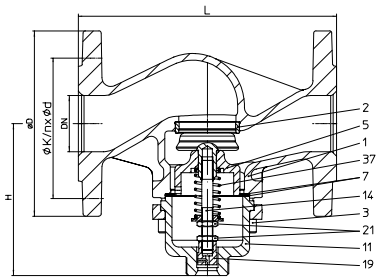

Fig. 12.771....1..1 max. 130°C

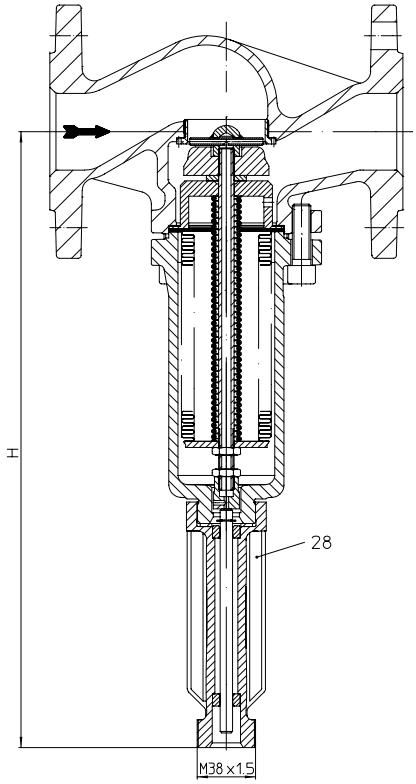

Fig. ...772 with cooling spacer max. 300°C

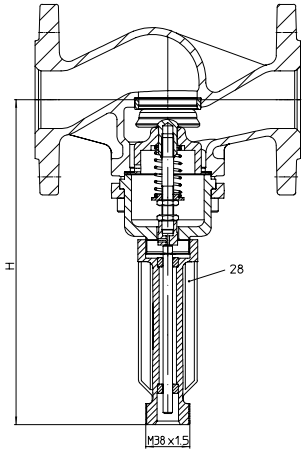

Fig. 12.772....1..1 with cooling spacer max. 250°C

DN			15		20	25	32	40	50	65	80	100
Face-to-face dimension FTF series 1 according to DIN EN 558												
L		(mm)	130		150	160	180	200	230	290	310	350
Dimensions												Standard-flange dimensions refer to page 15
Fig. 771	H	(mm)	160		160	195	195	215	255	260	320	340
Fig. 772	H	(mm)	305		305	340	340	360	400	405	455	485
Fig. 771...1..1 (LC)	H	(mm)	125		125	125	125	130	135	--	--	--
Fig. 772...1..1 (LC)	H	(mm)	270		270	270	270	275	280	--	--	--
Weights												
Fig. 771		(kg)	3,4		4,2	5,3	6,9	8,8	12,4	23	29	38
Fig. 772		(kg)	4,3		5,1	6,3	7,9	9,7	13,3	24	30	39
Fig. 771...1..1 (LC)		(kg)	2,5		3,5	5	6	8	10	--	--	--
Fig. 772...1..1 (LC)		(kg)	3,5		4,5	6	7	9	11	--	--	--
Kvs-value												
Standard	Kvs-value	(m^3/h)	4,0		**6,3**	**10,0**	**16,0**	**22,0**	**32,0**	**50,0**	**70,0**	**80,0**
	Travel	(mm)	7,5		7,5	8	9,5	9,5	11,5	14	15	15
Reduced	Kvs-value	(m3/h)	**0,4**	**1,0**	--	--	--	--	--	--	--	--
	Travel	(mm)	5	5	--	--	--	--	--	--	--	--
Leakage rate		IV acc. to DIN EN 1349 or DIN EN 60534-4 (≤ 0,01% from the nominal flow)										
Max. differential pressure drop Δp												
Fig. 771	Straight through	(bar)	16		16	16	16	12	9	9	9	9
Fig. 772		(bar)	16		16	16	16	12	9	9	9	9
Fig. 771...1..1 (LC)	Straight through	(bar)	9,3		9,3	5,6	4,1	2,3	1,5	--	--	--
Fig. 772...1..1 (LC)		(bar)	9,3		9,3	5,6	4,1	2,3	1,5	--	--	--
Pressure balancing of the actuator needed: P1 > Δp (e.g. P1=12 bar, Δp=9 bar). For pressure balancing use manual control device (Type 9900390011).												

Parts						
Pos.	**Sp.p.**	**Description**	**Fig. 12.771 Fig. 12.772**	**Fig. 22./23.771 Fig. 22./23.772**	**Fig. 35.771 Fig. 35.772**	**Fig. 55.771 Fig. 55.772**
1		Body	EN-JL1040, EN-GJL-250	EN-JS1049, EN-GJS-400-18U-LT	GP240GH+N, 1.0619+N	GX5CrNiMo19-11-2, 1.4408
2		Seat	X6CrNiTi18-10, 1.4541			
3		Cheese head screw	A2-70			
5		Giude bushing	X6CrNiTi18-10, 1.4541			
7	x	Gasket	Graphite			
11		Bonnet	EN-JS1049, EN-GJS-400-18U-LT			GX5CrNiMo19-11-2, 1.4408
14	x	Spindle unit	X6CrNiTi18-10, 1.4541			
19		Bearing cover	X6CrNiTi18-10, 1.4541			
21		Hexagon nut	A2-70			
28		Cooling spacer	EN-JS1049, EN-GJS-400-18U-LT			X6CrNiTi18-10, 1.4541
37	x	Compression spring	X12CrNi17-7, 1.4310			
55	x	Balanced bellow	X6CrNiTi18-10, 1.4541			
	└ Spare parts					

Information / restriction of technical rules need to be observed!
Operating and installation instructions can be downloaded at www.ari-armaturen.com.
ARI-Valves of EN-JL1040 are not allowed to be operated in systems acc. to TRD 110.
A production permission acc. to TRB 801 No. 45 is available (acc. to TRB 801 No. 45 EN-JL1040 is not allowed.)
The engineer, designing a system or a plant, is responsible for the selection of the correct valve.
Resistance and fitness must be verified (contact manufacturer for information, refer to Product overview and Resistance list).

Thermal closing valve straight through with screwed sockets without balanced bellow

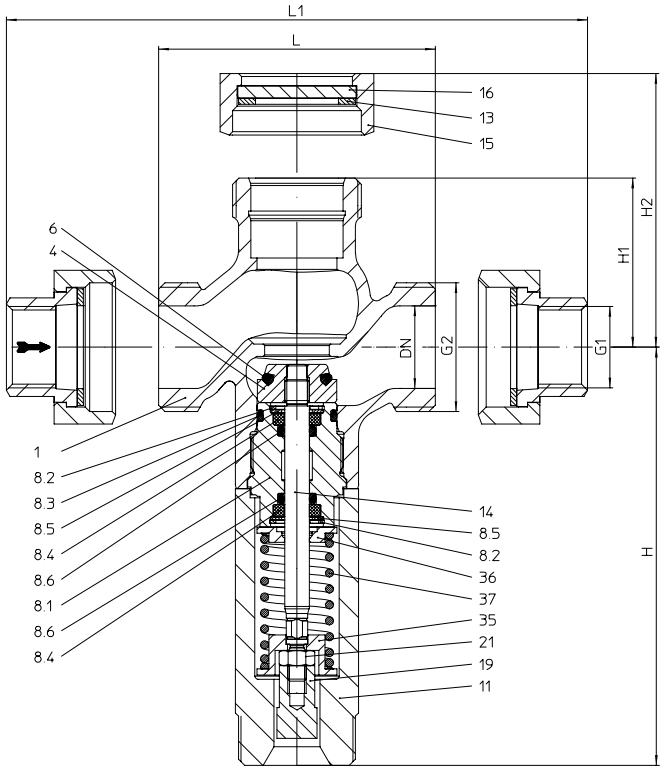

Fig. 72.771....2..1 max. 130°C

Figure	Nominal pressure	Material	Nominal diameter
72.771....2..1	PN16	CC499K	G1/2" - G1"

Figure	Nominal pressure	Material	Nominal diameter
45.771....2..1 45.772....2..1	PN40	SA105	G1/2" - G2"

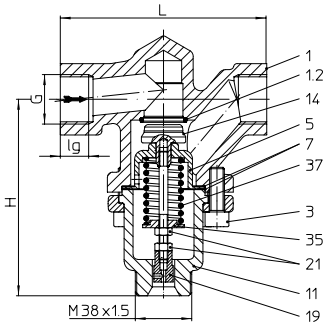

Fig. 45.771....2..1 max. 130°C

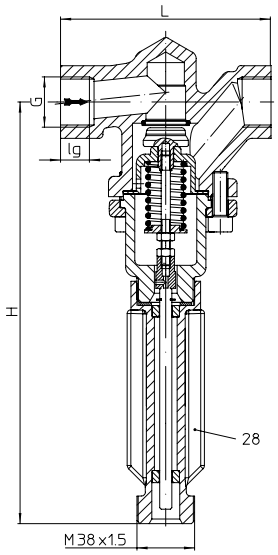

Fig. 45.772....2..1 with cooling spacer max. 250°C

DN			15	20	25	32	40	50
Face-to-face dimension FTF series 1 according to DIN EN 558								
L		(mm)	80	90	110	120	130	150
L1		(mm)	128	138	166	--	--	--
Dimensions								
Ø G1		(inch)	**1/2**	**3/4**	**1**	**1 1/4**	**1 1/2**	**2**
Ø G2		(inch)	**1 1/8**	**1 1/4**	**1 1/2**	**2**	**2 1/4**	**2 3/4**
Fig. 771....2..1	H	(mm)	283	283	289	--	--	--
	H1	(mm)	55	55	55	--	--	--
	H3	(mm)	65	65	66	--	--	--
Fig. 45.771....2..1	H	(mm)	127	127	131	138	138	140
Fig. 45.772....2..1	H	(mm)	272	272	276	283	283	285
Weights								
Fig. 771....2..1		(kg)	2,9	3,1	3,7	--	--	--
Fig. 45.771....2..1		(kg)	2,5	3,5	5	6	8	10
Fig. 45.772....2..1		(kg)	3,5	4,5	6	7	9	11
Kvs-value								
Fig. 72.771....2..1	Kvs-value	(m^3/h)	**4,0**	**6,3**	**10,0**	**--**	**--**	**--**
	Travel	(mm)	7,5	7,5	8	--	--	--
Fig. 45.771....2..1	Kvs-value	(m^3/h)	**3,1**	**5,5**	**8,6**	**12,8**	**20**	**26**
Fig. 45.772....2..1	Travel	(mm)	7,5	7,5	8	9,5	9,5	11,5
Leakage rate		IV acc. to DIN EN 1349 or DIN EN 60534-4 (≤ 0,01% from the nominal flow)						
Max. differential pressure drop Δp								
Fig. 72.771....2..1	Straight through	(bar)	9,3	9,3	5,6	--	--	--
Fig. 45.771....2..1 Fig. 45.772....2..1	Straight through	(bar)	9,3	9,3	5,6	4,1	2,3	1,5
Pressure balancing of the actuator needed: P1 > Δp (e.g. P1=12 bar, Δp=9,3 bar). For pressure balancing use manual control device (Type 9900390011).								

Parts				
Pos.	**Sp.p.**	**Description**	**Fig. 72.771....2..1**	**Fig. 45.771....2..1 / Fig. 45.772....2..1**
1		Body	CuSn5Zn5Pb2-C, CC499K	SA105
1.2		Seat	--	G19 9 Nb Si, 1.4551
3		Cheese head screw	A4-70	A2-70
4	x	Plug	CuZn39Pb3, CW614N	--
5		Giude bushing	--	X20Cr13+QT, 1.4021+QT
6	x	O-ring	EPDM	--
7	x	Gasket	--	Graphite
8.1		Coupling	CuZn39Pb3, CW614N	--
8.2		Retaining ring	CuSn8, CW453K	--
8.3	x	O-ring	EPDM	--
8.4		Bush	PTFE	--
8.5		Washer	CuZn37, CW508L	--
8.6	x	O-ring	EPDM	--
11		Bonnet	CuZn39Pb3, CW614N	P250 GH, 1.0460
13		Gasket	Centellen	--
14	x	Spindle / Spindle unit	X6CrNiMoTi17-12-2, 1.4571	X6CrNiTi18-10, 1.4541
15		Sleeve nut	TMP / chrom.	--
16		Blind plate	S235JR, 1.0037	--
19		Bearing cover	X6CrNiTi18-10, 1.4541	
21		Hexagon nut	A2	A2-70
28		Cooling spacer	--	EN-JS1049, EN-GJS-400-18U-LT
35		Spring plate	X6CrNiTi18-10, 1.4541	--
36		Spring plate	X6CrNiMoTi17-12-2, 1.4571	--
37	x	Compression spring	X10CrNi18-8, 1.4310	
	└ Spare parts			

Information / restriction of technical rules need to be observed!

Operating and installation instructions can be downloaded at www.ari-armaturen.com.

A production permission acc. to TRB 801 No. 45 is available.

The engineer, designing a system or a plant, is responsible for the selection of the correct valve.

Resistance and fitness must be verified (contact manufacturer for information, refer to Product overview and Resistance list).

Thermal-opening valve - straight through with flanges

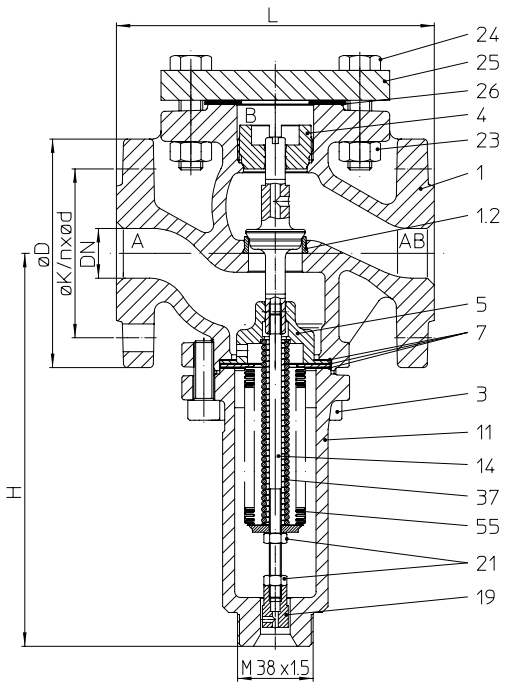

Fig. ...775 max. 150°C (> 150°C on request)

Figure	Nominal pressure	Material	Nominal diameter
12.775	PN16	EN-JL1040	DN15-100
22.775	PN16	EN-JS1049	DN15-100
23.775	PN25	EN-JS1049	DN15-100
35.775	PN40	1.0619+N	DN15-100
55.775	PN40	1.4408	DN15-100

Construction LC without balanced bellow

Figure	Nominal pressure	Material	Nominal diameter
12.775....1..1	PN16	EN-JL1040	DN15-50

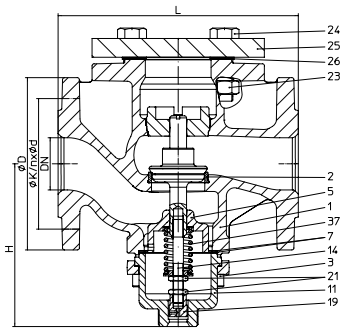

Fig. 12.775....1..1 max. 130°C (> 130°C on request)

DN			15	20	25	32	40	50	65	80	100
Face-to-face dimension FTF series 1 according to DIN EN 558											Standard-flange dimensions refer to page 15.
L		(mm)	130	150	160	180	200	230	290	310	350
Dimensions											
Fig. 775	H	(mm)	195	195	200	225	245	280	300	365	385
Fig. 775....1..1 (LC)	H	(mm)	125	125	130	155	160	160	--	--	--
Weights											
Fig. 775		(kg)	5,4	6,8	9,1	11,9	17	19,5	30	37	385
Fig. 775....1..1 (LC)		(kg)	4,5	6	8	10,5	15	17	--	--	--
Kvs-value											
Standard	Kvs-value	**(m^3/h)**	**4,0**	**6,3**	**10,0**	**16,0**	**22,0**	**32,0**	**50,0**	**70,0**	**80,0**
	Travel	**(mm)**	7,5	7,5	8	9,5	9,5	11,5	14	15	15
Reduced	Kvs-value	**(m^3/h)**	**1,0**	--	--	--	--	--	--	--	--
	Travel	**(mm)**	5	--	--	--	--	--	--	--	--
Leakage rate		IV acc. to DIN EN 1349 or DIN EN 60534-4 (≤ 0,01% from the nominal flow)									
Max. differential pressure drop Δp											
Fig. 775	**A ⟹ AB** Straight through	(bar)	12	4	4	4	4	4	4	4	4
Fig. 775....1..1 (LC)	**A ⟹ AB** Straight through	(bar)	3	3	2,5	1,5	1	0,5	--	--	--
Pressure balancing of the actuator needed: P1 > Δp (e.g. P1=14 bar, Δp=12 bar). For pressure balancing use manual control device (Type 9900390011).											

Parts						
Pos.	**Sp.p.**	**Description**	**Fig. 12.775**	**Fig. 22./23.775**	**Fig. 35.775**	**Fig. 55.775**
1		Body	EN-JL1040, EN-GJL-250	EN-JS1049, EN-GJS-400-18U-LT	GP240GH+N, 1.0619+N	GX5CrNiMo19-11-2, 1.4408
1.2		Seat	X20Cr13+QT, 1.4021+QT			X6CrNiMoTi17-12-2, 1.4571
3		Cheese head screw	A2-70			
4	x	Plug guiding	X20Cr13+QT, 1.4021+QT			X6CrNiTi18-10, 1.4541
5		Giude bushing	X20Cr13+QT, 1.4021+QT			X6CrNiTi18-10, 1.4541
7	x	Gasket	Graphite			
11		Bonnet	EN-JS1049, EN-GJS-400-18U-LT			GX5CrNiMo19-11-2, 1.4408
14	x	Spindle unit	X20Cr13+QT, 1.4021+QT / X6CrNiTi18-10, 1.4541			X6CrNiTi18-10, 1.4541
19		Bearing cover	X6CrNiTi18-10, 1.4541			
21		Hexagon nut	A2-70			
23		Hexagon nut	C35E, 1.1181 -A2B			A4-70
24		Hexagon screw	5.6-A2B			A4-70
25		Flange	S235JR, 1.0037			X6CrNiTi18-10, 1.4541
26	x	Gasket	Graphite (with CrNi-expanded metal insert)			
28		Cooling spacer	EN-JS1049, EN-GJS-400-18U-LT			X6CrNiTi18-10, 1.4541
37	x	Compression spring	X12CrNi17-7, 1.4310			
55	x	Balanced bellow	X6CrNiTi18-10, 1.4541			
	└ Spare parts					

Information / restriction of technical rules need to be observed!

Operating and installation instructions can be downloaded at www.ari-armaturen.com.

ARI-Valves of EN-JL1040 are not allowed to be operated in systems acc. to TRD 110.

A production permission acc. to TRB 801 No. 45 is available (acc. to TRB 801 No. 45 EN-JL1040 is not allowed.)

The engineer, designing a system or a plant, is responsible for the selection of the correct valve.

Resistance and fitness must be verified (contact manufacturer for information, refer to Product overview and Resistance list).

Thermal opening valve straight through with screwed sockets without balanced bellow

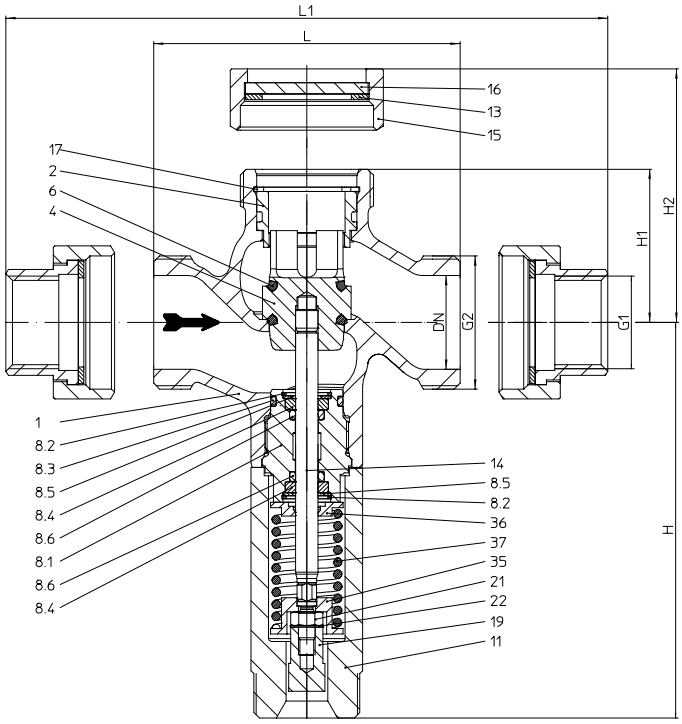

Figure	Nominal pressure	Material	Nominal diameter
72.775....2..1	PN16	CC499K	G1/2" - G2"

Fig. 72.775....2..1 max. 130°C

DN			15	20	25	32	40	50
Face-to-face dimension FTF series 1 according to DIN EN 558								
L		(mm)	80	90	110	120	130	150
L1		(mm)	128	138	166	186	199	223
Dimensions								
Ø G1		(inch)	**1/2**	**3/4**	**1**	**1 1/4**	**1 1/2**	**2**
Ø G2		(inch)	**1 1/8**	**1 1/4**	**1 1/2**	**2**	**2 1/4**	**2 3/4**
Fig. 775....2..1	H	(mm)	283	283	289	293	302	302
	H1	(mm)	55	55	55	55	60	65
	H2	(mm)	79	79	83	88	95	102
Weights								
Fig. 775....2..1		(kg)	2,4	2,6	3,2	4,1	4,7	6,3
Kvs-value								
Standard	Kvs-value	(m^3/h)	**4,0**	**6,3**	**10,0**	**16,0**	**25,0**	**40,0**
	Travel	(mm)	14	14	14	14	14	14
Leakage rate		IV acc. to DIN EN 1349 or DIN EN 60534-4 (≤ 0,01% from the nominal flow)						
Max. differential pressure drop Δp								
A ⟹ AB Straight through		(bar)	3	3	2,5	1,5	1	0,5

Parts			
Pos.	**Sp.p.**	**Description**	**Fig. 72.775....2..1**
1		Body	CuSn5Zn5Pb2-C, CC499K
2		Seat ring	X20Cr13+QT, 1.4021+QT
3		Cheese head screw	A4-70
4	x	Plug	CuZn39Pb3, CW614N
6	x	O-ring	EPDM
8.1		Coupling	CuZn39Pb3, CW614N
8.2		Retaining ring	CuSn8, CW453K
8.3	x	O-ring	EPDM
8.4		Bush	PTFE
8.5		Washer	CuZn37, CW508L
8.6	x	O-ring	EPDM
11		Bonnet	CuZn39Pb3, CW614N
13		Gasket	Centellen
14	x	Spindle	X6CrNiMoTi17-12-2, 1.4571
15		Sleeve nut	TMP / chrom.
16		Blind plate	S235JR, 1.0037
17		Retaining ring	FSt
19		Bearing cover	X6CrNiTi18-10, 1.4541
21		Hexagon nut	A2
22		Washer	A2
35		Spring plate	X6CrNiTi18-10, 1.4541
36		Spring plate	X6CrNiMoTi17-12-2, 1.4571
37	x	Compression spring	X10CrNi18-8, 1.4310
	└ Spare parts		

Information / restriction of technical rules need to be observed!
Operating and installation instructions can be downloaded at www.ari-armaturen.com.
A production permission acc. to TRB 801 No. 45 is available.
The engineer, designing a system or a plant, is responsible for the selection of the correct valve.
Resistance and fitness must be verified (contact manufacturer for information, refer to Product overview and Resistance list).

Thermal-mixing/diverting valve - 3way with flanges

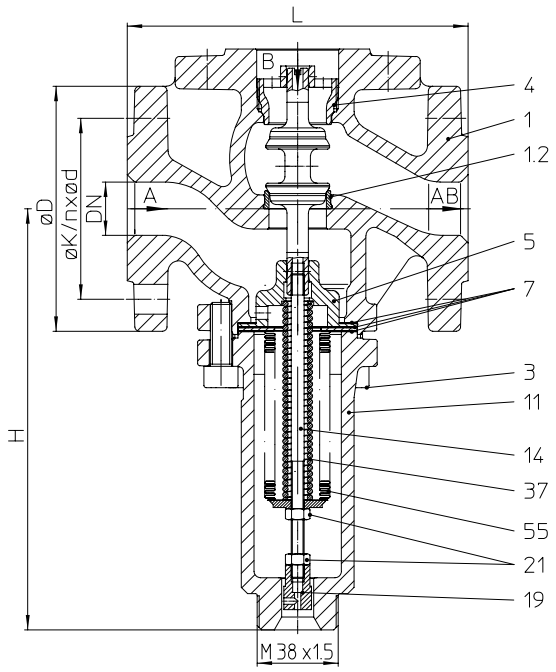

Fig. ...773 max. 150°C

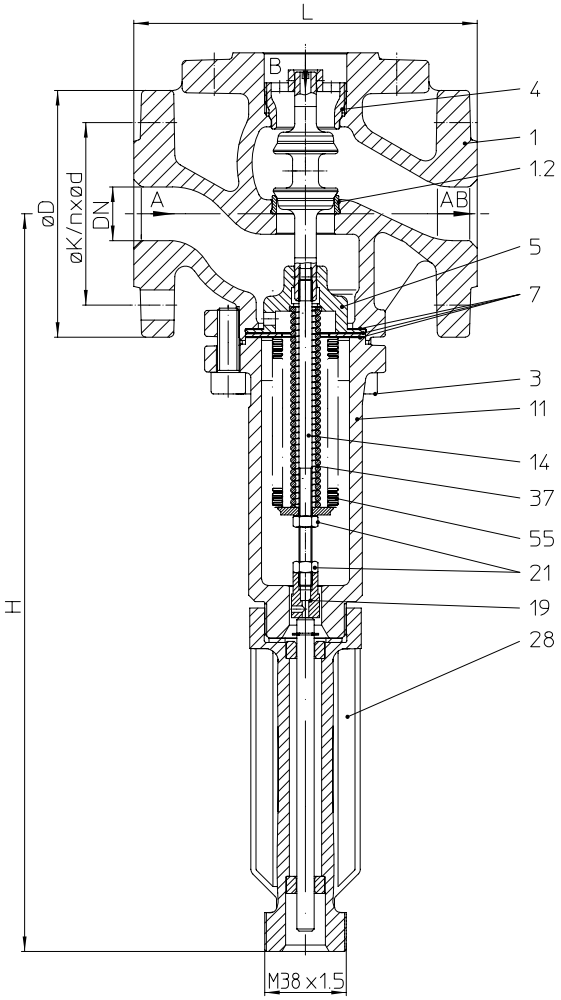

Fig. ...774 with cooling spacer max. 300°C

Figure	Nominal pressure	Material	Nominal diameter
12.773 / 12.774	PN16	EN-JL1040	DN15-100
22.773 / 22.774	PN16	EN-JS1049	DN15-100
23.773 / 23.774	PN25	EN-JS1049	DN15-100
35.773 / 35.774	PN40	1.0619+N	DN15-100
55.773 / 55.774	PN40	1.4408	DN15-100

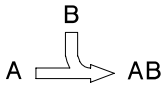

Mixing function

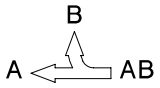

Diverting function

Construction LC without balanced bellow

Figure	Nominal pressure	Material	Nominal diameter
12.773....1..1 12.774....1..1	PN16	EN-JL1040	DN15-50

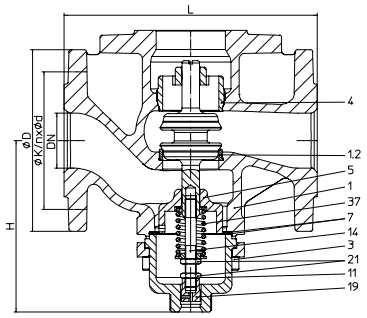

Fig. 12.773....1..1 max. 150°C

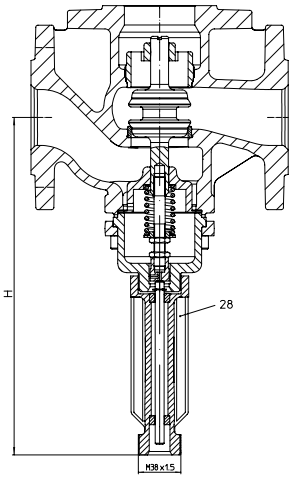

Fig. 12.774....1..1 with cooling spacer max. 300°C

DN			15	20	25	32	40	50	65	80	100
Face-to-face dimension FTF series 1 according to DIN EN 558											Standard-flange dimensions refer to page 15.
L		(mm)	130	150	160	180	200	230	290	310	350
Dimensions											
Fig. 773	H	(mm)	195	195	200	225	245	280	300	365	385
Fig. 774	H	(mm)	340	340	345	370	390	425	445	510	530
Fig. 773....1..1 (LC)	H	(mm)	125	125	130	155	160	160	--	--	--
Fig. 774....1..1 (LC)	H	(mm)	270	270	275	300	305	305	--	--	--
Weights											
Fig. 773		(kg)	4,4	5,8	7,6	9,9	14,5	16,5	25	31	38
Fig. 774		(kg)	5,4	6,8	8,6	10,9	15,5	17,5	26	32	39
Fig. 773....1..1 (LC)		(kg)	3,5	5	6,5	8,5	12,5	14	--	--	--
Fig. 774....1..1 (LC)		(kg)	4,5	6	7,5	9,5	13,5	15	--	--	--
Kvs-value											
Standard	Kvs-value	(m^3/h)	**4,0**	**6,3**	**10,0**	**16,0**	**22,0**	**32,0**	**50,0**	**70,0**	**80,0**
	Travel	(mm)	7,5	7,5	8	9,5	9,5	11,5	14	15	15
Reduced	Kvs-value	(m^3/h)	**1,0**	**--**	**--**	**--**	**--**	**--**	**--**	**--**	**--**
	Travel	(mm)	5	--	--	--	--	--	--	--	--
Leakage rate		IV acc. to DIN EN 1349 or DIN EN 60534-4 (≤ 0,01% from the nominal flow)									

Max. differential pressure drop Δp												
Fig. 773 Fig. 774	B A → AB Mixing function	$p_B > p_A$ ($\Delta p = p_B - p_{AB}$)	(bar)	12	16	16	16	12	9	9	9	9
		$p_A > p_B$ ($\Delta p = p_A - p_{AB}$)	(bar)	12	4	4	4	4	4	4	4	4
	B A ← AB Diverting function	$p_{AB} > p_B$ $p_{AB} > p_A$	(bar)	12	4	4	4	3	1,5	0,7	0,25	0,15
Fig. 773....1..1 (LC) Fig. 774....1..1 (LC)	B A → AB Mixing function		(bar)	3	3	2,5	1,5	1	0,5	--	--	--
	B A ← AB Diverting function		(bar)	3	3	2,5	1,5	1	0,5	--	--	--
Pressure balancing of the actuator needed: P1 > Δp (e.g. P1=14 bar, Δp=12 bar). For pressure balancing use manual control device (Type 9900390011).												

Parts						
Pos.	**Sp.p.**	**Description**	**Fig. 12.773 Fig. 12.774**	**Fig. 22./23.773 Fig. 22./23.774**	**Fig. 35.773 Fig. 35.774**	**Fig. 55.773 Fig. 55.774**
1		Body	EN-JL1040, EN-GJL-250	EN-JS1049, EN-GJS-400-18U-LT	GP240GH+N, 1.0619+N	GX5CrNiMo19-11-2, 1.4408
1.2		Seat	X20Cr13+QT, 1.4021+QT			X6CrNiMoTi17-12-2, 1.4571
3		Cheese head screw	A2-70			
4	x	Plug guiding	X20Cr13+QT, 1.4021+QT			X6CrNiTi18-10, 1.4541
5		Giude bushing	X20Cr13+QT, 1.4021+QT			X6CrNiTi18-10, 1.4541
7	x	Gasket	Graphite			
11		Bonnet	EN-JS1049, EN-GJS-400-18U-LT			GX5CrNiMo19-11-2, 1.4408
14	x	Spindle unit	X20Cr13+QT, 1.4021+QT / X6CrNiTi18-10, 1.4541			X6CrNiTi18-10, 1.4541
19		Bearing cover	X6CrNiTi18-10, 1.4541			
21		Hexagon nut	A2-70			
28		Cooling spacer	EN-JS1049, EN-GJS-400-18U-LT			X6CrNiTi18-10, 1.4541
37	x	Compression spring	X12CrNi17-7, 1.4310			
55	x	Balanced bellow	X6CrNiTi18-10, 1.4541			
	└ Spare parts					

Information / restriction of technical rules need to be observed!

Operating and installation instructions can be downloaded at www.ari-armaturen.com.

ARI-Valves of EN-JL1040 are not allowed to be operated in systems acc. to TRD 110.

A production permission acc. to TRB 801 No. 45 is available (acc. to TRB 801 No. 45 EN-JL1040 is not allowed.)

The engineer, designing a system or a plant, is responsible for the selection of the correct valve.

Resistance and fitness must be verified (contact manufacturer for information, refer to Product overview and Resistance list).

Thermal mixing/diverting valve in 3-way form with screwed sockets without balanced bellow

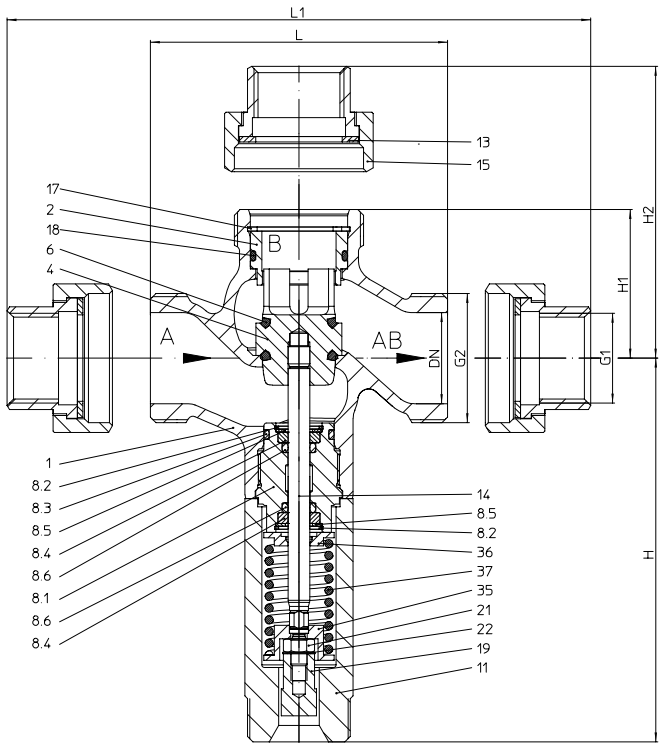

Figure	Nominal pressure	Material	Nominal diameter
72.773....2..1	PN16	CC499K	G1/2" - G2"

Fig. 72.773....2..1 max. 130°C

DN		15	20	25	32	40	50
Face-to-face dimension FTF series 1 according to DIN EN 558							
L	(mm)	80	90	110	120	130	150
L1	(mm)	128	138	166	186	199	223
Dimensions							
Ø G1	(inch)	**1/2**	**3/4**	**1**	**1 1/4**	**1 1/2**	**2**
Ø G2	(inch)	**1 1/8**	**1 1/4**	**1 1/2**	**2**	**2 1/4**	**2 3/4**
H	(mm)	136	136	142	146	155	155
H1	(mm)	55	55	55	55	60	65
H2	(mm)	79	79	83	88	95	102
Weights							
773....2..1	(kg)	2,4	2,6	3,2	4,1	4,7	6,3

Kvs-value								
Standard	Kvs-value	**(m^3/h)**	**4,0**	**6,3**	**10,0**	**16,0**	**25,0**	**40,0**
	Travel	**(mm)**	**14**	**14**	**14**	**14**	**14**	**14**

Leakage rate	IV acc. to DIN EN 1349 or DIN EN 60534-4 (≤ 0,01% from the nominal flow)

Max. differential pressure drop Δp							
B A → AB Mixing function	(bar)	3	3	2,5	1,5	1	0,5
B A ← AB Diverting function	(bar)	3	3	2,5	1,5	1	0,5

Parts

Pos.	Sp.p.	Description	Fig. 72.773....2..1
1		Body	CuSn5Zn5Pb2-C, CC499K
2		Seat ring	X20Cr13+QT, 1.4021+QT
4		Plug	CuZn39Pb3, CW614N
6	x	O-ring	EPDM
8.1		Coupling	CuZn39Pb3, CW614N
8.2		Retaining ring	CuSn8, CW453K
8.3	x	O-ring	EPDM
8.4		Bush	PTFE
8.5		Washer	CuZn37, CW508L
8.6	x	O-ring	EPDM
11		Bonnet	CuZn39Pb3, CW614N
13		Gasket	Centellen
14	x	Spindle	X6CrNiMoTi17-12-2, 1.4571
15		Sleeve nut	TMP / chrom.
17		Retaining ring	FSt
18	x	O-ring	EPDM
19		Bearing cover	X6CrNiTi18-10, 1.4541
21		Hexagon nut	A2
22		Washer	A2
35		Spring plate	X6CrNiTi18-10, 1.4541
36		Spring plate	X6CrNiMoTi17-12-2, 1.4571
37	x	Compression spring	X10CrNi18-8, 1.4310
	└ Spare parts		

Information / restriction of technical rules need to be observed!
Operating and installation instructions can be downloaded at www.ari-armaturen.com.
A production permission acc. to TRB 801 No. 45 is available.
The engineer, designing a system or a plant, is responsible for the selection of the correct valve.
Resistance and fitness must be verified (contact manufacturer for information, refer to Product overview and Resistance list).

Application / Operating principle

Thermal control devices are used to regulate temperature of fluids, air and steam. You will find them in industrial heating and ventilation systems, in residential applications, in marked-warehouses, ship building and also in cooling systems.

The ARI-Temperature Regulator (TEMPTROL) works on the principle of thermal expansion. For operation no extra energy is needed, self acting. Changes in temperature lead to changes in fluid volume in the capillary tube, which means a certain stroke in the actuator onto the valve spindle. The excess temperature protector prevents an unnecessary load on the controller when the temperature is to high on the thermal sensor. The setting range can be adjusted precisely with the adjusting knob to the required temperature value. If a manual control device is fitted, the stroke position is shown and the valve can be operated manually. With thermal detectors acc. to DIN EN 14597, the intended value can only be adjusted with tools.

Ambient temperature: max. 70°C for indicator unit (DIN EN 14597 T70)

Operating principle:	
Thermal closing valve:	- closes with rising temperature
Thermal opening valve:	- opens with rising temperature
Thermo-3-way mixing valve:	- reduces or closes inlet B with rising temperature (at mixing function, the warmer medium must be put into inlet B)
Thermo-3-way diverting valve:	- reduces or closes inlet B with rising temperature

Selecting the valve

To select the nominal diameter it is necessary to know the Kvs-value.
This can be done using the calculation program „MyValve“ (Module „ARI-Temperature regulator TEMPTROL-Calculation“).
The following data is needed

- Medium
- Temperature
- Flow capacity (Q)
- Upstream pressure (p1)
- Downstream pressure (p2)

Then the thermal controller with the next highest Kvs-value is selected (see table). With „MyValve“ you can also calculate the velocities in the piping, before and behind the valve, and if necessary select the right piping size.
For selecting a valve, the pressure-temperature-ratings must be observed (see page 15), also the corrosive aspect.

Selecting the controller

The following must be observed:

- Type selecting acc. to the used medium
  (rod sensor, spiral sensor for gas, spiral sensor for liquids, with thread or flange).
- The temperature range.
- Installation place of thermal sensor, set point adjusting unit and valve (length of capillary tubes).

Then the thermal controller is selected using the recommended proportional range (see page 17).

The proportional range shows by which temperature alteration on the thermal sensor, the valve needs from open to closed position. Preferably use the range between 10 and 15 K. It is also possible to use the other ranges, if the calculation of the control loop finds this necessary. We strongly advise that you check the systems transient response.

DN			15	20	25	32	40	50	65	80	100
Standard-flange dimensions											Flanges acc. to DIN EN 1092-2 (Flange holes / -thickness tolerances acc. to DIN)
PN16	ØD	(mm)	95	105	115	140	150	165	185	200	220
	ØK	(mm)	65	75	85	100	110	125	145	160	180
	n x Ød	(mm)	4x14	4x14	4x14	4x18	4x18	4x18	4x18	8x18	8x18
PN25	ØD	(mm)	95	105	115	140	150	165	185	200	235
	ØK	(mm)	65	75	85	100	110	125	145	160	190
	n x Ød	(mm)	4x14	4x14	4x14	4x18	4x18	4x18	8x18	8x18	8x22
PN40	ØD	(mm)	95	105	115	140	150	165	185	200	235
	ØK	(mm)	65	75	85	100	110	125	145	160	190
	n x Ød	(mm)	4x14	4x14	4x14	4x18	4x18	4x18	8x18	8x18	8x22

Pressure-temperature-ratings	**Intermediate values for max. permissible operational pressures can be determined by linear interpolation of the given temperature / pressure chart.**

acc. to DIN EN 1092-2			**-60°C to <-10°C** [1]	**-10°C to 120°C**	**150°C**	**200°C**	**250°C**	**300°C**
EN-JL1040	16	(bar)	--	16	14,4	12,8	11,2	9,6
EN-JS1049	16	(bar)	on request	16	15,5	14,7	13,9	12,8
EN-JS1049	25	(bar)	on request	25	24,3	23	21,8	20

acc. to manufacturers standard			**-60°C to <-10°C** [1]	**-10°C bis120°C**	**150°C**	**200°C**	**250°C**	**300°C**
1.0619+N	40	(bar)	30	40	38,1	35	32	28
SA105	40	(bar)	30	40	38,1	35	32	28
DN100 max. 26 bar								

acc. to DIN EN 1092-1			**-60°C to <-10°C** [1]	**-10°C to 100°C**	**150°C**	**200°C**	**250°C**	**300°C**
1.4408	40	(bar)	40	40	36,3	33,7	31,8	29,7
DN100 max. 26 bar								

acc. to DIN EN 1092-3			**-10°C to 20°C**	**100°C**	**130°C**
CC499K	16	(bar)	16	16	16

[1] Studs and nuts made of A4-70 (at temperatures below -10°C)

Please indicate when ordering:

- Figure-No.
- Nominal diameter
- Nominal pressure
- Body material
- Kvs-value
- ΔP
- Medium

Ordering data for controller: refer to page 16.

Example:

Figure 22.772; Nominal diameter DN25; Nominal pressure PN16; Body material EN-JS1049; Kvs 10, ΔP 3 bar, Water.

	Type		Size	Setting range	Time constant without sensor pocket	Temperature sensor version
	Thermal controller	Thermal detector				
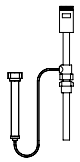	9900386011	9900387611	I	-20 ... +50°C 0 ... +70°C +30 ... +100°C +60 ... +130°C	75 s [2] measured with water (flow rate 0,2 - 0,3 m/s)	Temperature sensor and setpoint adjusting knob in one unit. Stainless steel 1.4541 (optional sensor pocket)
	9900386021	9900387621	II			
	9900386031	9900387631	III			
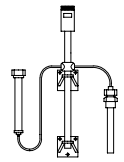	9900386041	9900387641	I	-20 ... +50°C 0 ... +70°C +30 ... +100°C +60 ... +130°C +130 ... +200°C		Rod sensor, nickel-plated brass (optional sensor pocket)
	9900386051	9900387651	II			
	9900386061	9900387661	III			
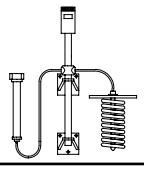	9900386071	9900387671	I		80 s measured with air (flow rate 3m/s)	Spiral sensor for gas, Copper blank with flange
	9900386081	9900387681	II			
	9900386091	9900387691	III			
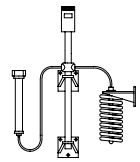	9900386101	9900387701	I			Spiral sensor for gas, Copper blank with bracket
	9900386111	9900387711	II			
	9900386121	9900387721	III			
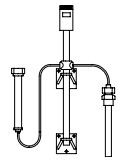	9900386131	9900387731	I		80 s [2] measured with water (flow rate 0,2 - 0,3 m/s)	Rod sensor, Stainless steel 1.4541 (optional sensor pocket)
	9900386141	9900387741	II			
	9900386151	9900387751	III			
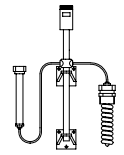	9900386311	9900387911	I	-20 ... +50°C 0 ... +70°C +30 ... +100°C +60 ... +130°C	15 s measured with water (flow rate 0,2 - 0,3 m/s)	Spiral sensor for liquids and gases, nickel-plated copper
	9900386321	9900387921	II			
	9900386331	9900387931	III			
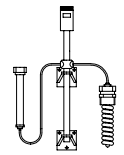	9900386341	9900387941	I	-20 ... +50°C 0 ... +70°C +30 ... +100°C +60 ... +130°C +130 ... + 200°C		Spiral sensor for liquids and gases, Stainless steel 1.4541
	9900386351	9900387951	II			
	9900386361	9900387961	III			
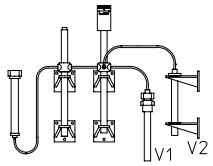	9900387461	--	I	+35 ... +105°C trend scale	75 s [3] Flow temperature sensor measured with water (flow rate 0,2 - 0,3 m/s)	rod sensor, nickel-plated brass (optional sensor pocket) outdoor rod sensor, stainl. st. 1.4541 (with bracket)
	9900387471	--	I			
	9900387481	--	III			
	V1 : V2 = 1 : 2,5 [1]					
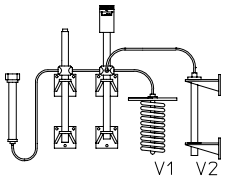	9900387491	--	I	+10 ... +50°C trend scale	80 s Air intake temperature sensor measured with air (flow rate 3m/s)	Spiral sensor for gas, Copper blank with flange outdoor rod sensor, stainl. st. 1.4541 (with bracket)
	9900387501	--	II			
	9900387511	--	III			
	V1 : V2 = 1,8 : 1 [1]					
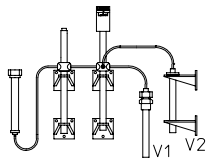	9900387581	--	I	+25 ... +95°C trend scale	75 s [3] Flow temperature sensor measured with water (flow rate 0,2 - 0,3 m/s)	Rod sensor, nickel-plated brass (optional sensor pocket) outdoor rod sensor, stainl. st. 1.4541 (with bracket)
	9900387591	--	II			
	9900387601	--	III			
	V1 : V2 = 1 : 1,9 [1]					

[1] V1 = Volume of controlled volume sensor
V2 = Volume of outside temperature sensor

[2] with brass sensor pocket: 100 s
with stainless steel sensor pocket: 115 s

[3] with brass sensor pocket: 125 s
with stainless steel sensor pocket: 145 s

Proportional range (Combination controller with valve in Kelvin) [1]											
DN	**15**			**20**	**25**	**32**	**40**	**50**	**65**	**80**	**100**
Controller size I	**10**	**10**	**15**	**15**	**17**	20	20	24	37	39	39
Controller size II	7,5	7,5	10	10	12	**13**	**13**	**16**	**27**	**29**	**29**
Controller size III	5	5	6,5	6,5	7,5	8,5	8,5	10	20	21	21

Proportional range Fig. 773 LCG Thermo-3-way mixing valve / Fig. 775 LCG Thermal opening valve (Combination controller with valve in Kelvin) [1]							
DN		**15**	**20**	**25**	**32**	**40**	**50**
G1	(inch)	**1/2**	**3/4**	**1**	**1 1/4**	**1 1/2**	**2**
G2	(inch)	**1 1/8**	**1 1/4**	**1 1/2**	**2**	**2 1/4**	**2 3/4**
Controller size I		29	29	29	29	29	29
Controller size II		**19**	**19**	**19**	**19**	**19**	**19**
Controller size III		12	12	12	12	12	12

= recommended combinations

[1] The proportional range determines at what change in sensor temperature the valve will move from totally open to totally closed.

Setting diagrams
(only for temperature regulators with two temperature sensors and trend scale)

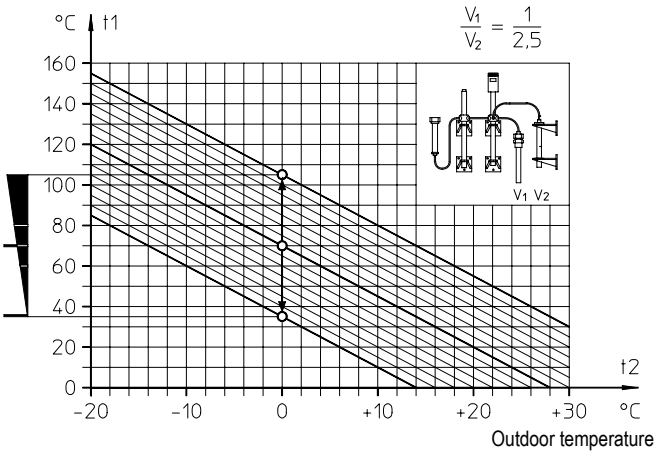

Setting range +35°C to +105°C
Type 9900387461 ... 481

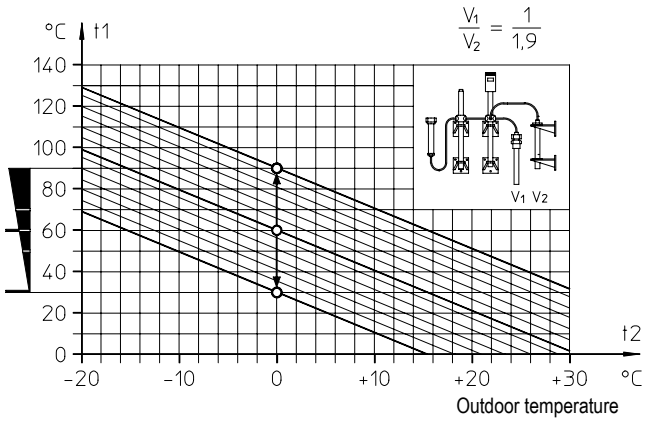

Setting range +30°C to +90°C
Type 9900387581 ... 601

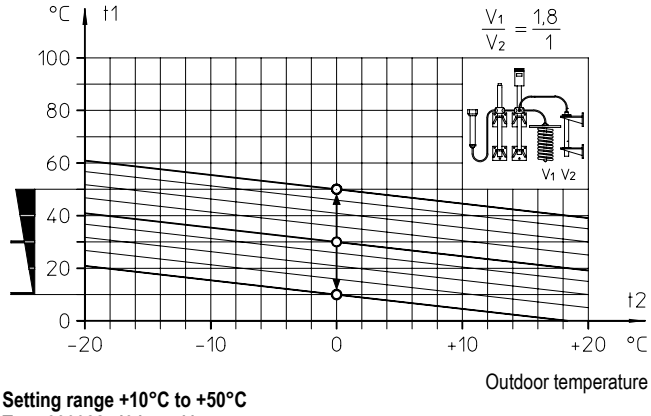

Setting range +10°C to +50°C
Type 9900387491 ... 511

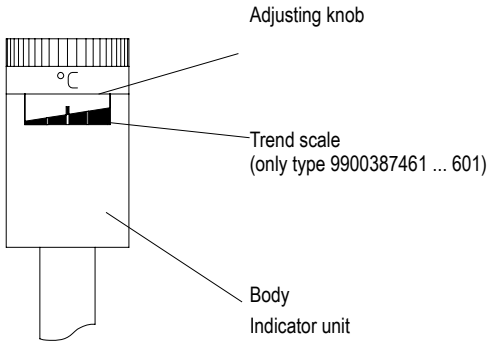

Please indicate when ordering:
- Thermal controller / detector (Type-No.)
- Temperature range
- Length of capillary tube (refer to page 19: L1 ... L4)
- Top mounted handwheel
- Sensor pocket

Please indicate in your order, if the valves are to be installed in hazardous areas (ATEX)

Example:
Type 9900386041; Temperature range 0...70°C; Length of capillary pipe 4m + 4m., Top mounted handwheel, Sensor pocket 990038600Z31

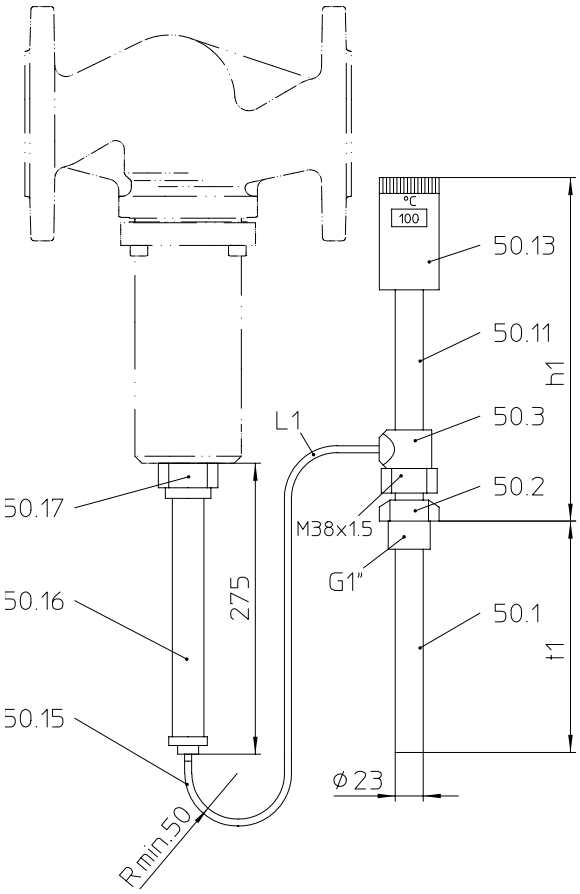

Type 9900386011 ... 031
Type 9900387611 ... 631

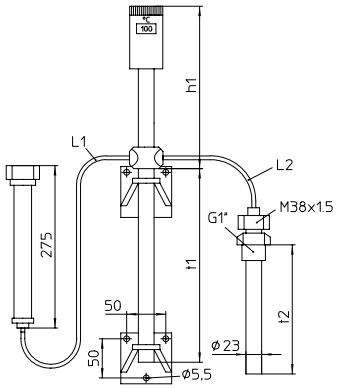

Type 9900386041 ... 061
Type 9900387641 ... 661

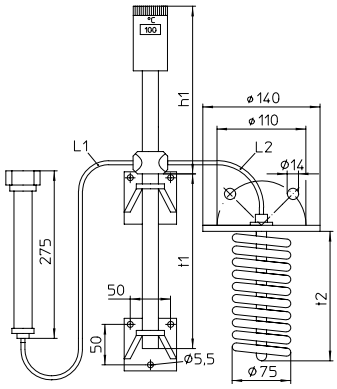

Type 9900386071 ... 091
Type 9900387671 ... 691

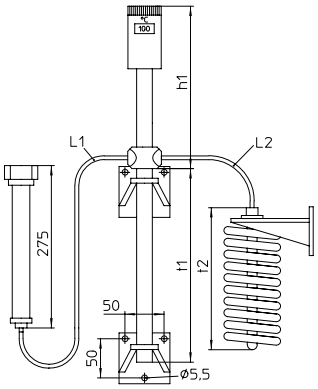

Type 9900386101 ... 121
Type 9900387701 ... 721

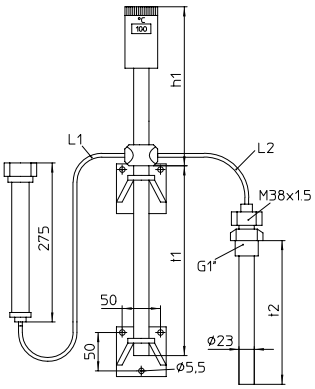

Type 9900386131 ... 151
Type 9900387731 ... 751

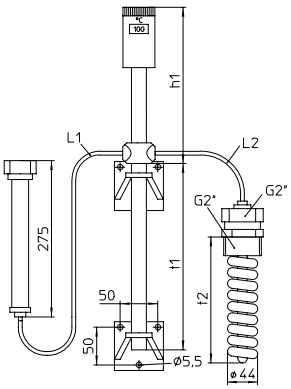

Type 9900386311 ... 361
Type 9900387911 ... 961

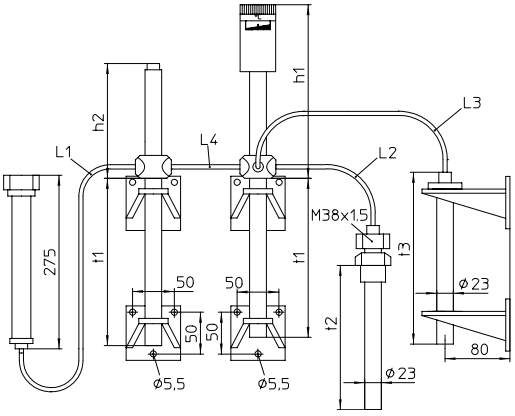

Type 9900387461 ... 481
Type 9900387581 ... 601

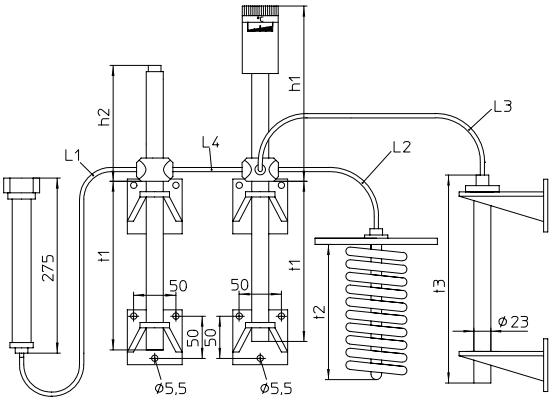

Type 9900387491 ... 511

Dimensions and weights											
Type		h1	h2	t1	t2	t3	L1	L2	L3	L4	Weight
Thermal controller	Thermal detector	(mm)	(mm)	(mm)	(mm)	(mm)	(m)	(m)	(m)	(m)	(kg)
9900386011	9900387611	269		339			2,4,8,16				1,8
9900386021	9900387621	347		557							3
9900386031	9900387631	347		857							3,3
9900386041	9900387641	240		239	256		2,4,8,16 [1]	2,4,8,16 [1]			3,2
9900386051	9900387651	318		389	390						3,5
9900386061	9900387661	318		559	600						4
9900386071	9900387671	240		239	151						3,2
9900386081	9900387681	318		389	207						4,2
9900386091	9900387691	318		559	305						4,5
9900386101	9900387701	240		239	184						3
9900386111	9900387711	318		389	240						4
9900386121	9900387721	318		559	338						4,2
9900386131	9900387731	240		239	256						3,2
9900386141	9900387741	318		389	390						3,5
9900386151	9900387751	318		559	600						4
9900386311	9900387911	240		239	266						3,5
9900386321	9900387921	318		389	394						4,5
9900386331	9900387931	318		559	598						5
9900386341	9900387941	240		239	266						3,5
9900386351	9900387951	318		389	394						4,5
9900386361	9900387961	318		559	598						5
9900387461		240	201	239	257	708	2,4,8,16 [1]	2,4,8,16 [1]	2,4,8,16 [1]	0,8	4,4
9900387471		318	201	389	391	1078					5,1
9900387481		318	477	559	601	839					7
9900387491		240	201	239	207	257					5
9900387501		318	201	389	305	384					5,8
9900387511		318	477	559	477	585					7,3
9900387581		240	201	239	257	542					4,2
9900387591		318	201	389	391	824					4,8
9900387601		318	477	559	601	642					6,5

[1] max. permissible length (L1+L2+...) = 24 m

Parts			
Pos.	Sp.p.	Description	
50.1	x	Thermal sensor	Constructions refer to page 16
50.2		Coupling	X6CrNiMoTi17-12-2, 1.4571
50.3		Sleeve nut	X6CrNiMoTi17-12-2, 1.4571
50.11		Pipe	Al (painted)
50.13		Indicator unit	ABS (plastic)
50.15		Capillary tube	Cu (tin plated)
50.16		Actuator	X6CrNiTi18-10, 1.4541
50.17		Sleeve nut	X6CrNiMoTi17-12-2, 1.4571
	└ Spare parts (Pos. 50.1 - 50.17 will be supplied as unit)		

Manual control device Type 9900390011

- Installed as an accessory between controller and valve.
- Allows valve to be operated independently of the controller.
- Valve position indicator (pin) plus two movable wire set rings mark the max. positions (totally open and totally closed) (Pos. 60.3).
- Enables a pressure relief of the actuator
- Allows a minimum flow for the thermal opening valve (Fig. 775)

Function:

The spindle of the manual control device transfers the travel of the actuator onto the valve. The valve and manual control device is sealed metal to metal.
The spindle is sealed with an o-ring and PTFE-strip band.

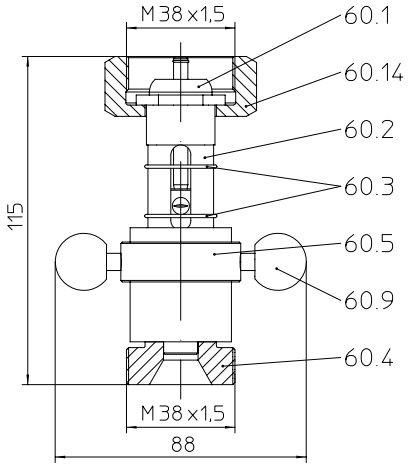

Parts			
Pos.	**Sp.p.**	**Description**	**Type 9900390011**
60.1	x	Sealing unit	CuZn39Pb3, CW614
60.2	x	Position tube	11SMn30+C, 1.0715+C
60.3	x	Retaining ring (Travel indicator)	X12CrNi17-7, 1.4310
60.4	x	Ground unit	CuZn39Pb3, CW614N
60.5	x	Adjusting ring	CuZn39Pb3, CW614N
60.9	x	Ball grip	Plastic
60.14	x	Sleeve nut	St Fe/Zn 12C
	└ Spare parts (Pos. 60.1 - 60.14 will be supplied as unit)		

Sensor pocket

A sensor pocket eliminates the need to empty the system when replacing the temperature sensor.

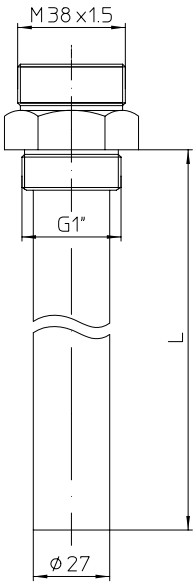

Technical data			
Construction		**Brass**	**Stainless steel**
Material		CW508L, CuZn37	X6CrNiTi18-10, 1.4541
max. pressure	(bar)	25	40
max. Temperature	(°C)	130	250

Dimensions and weights					
Type				L	Weight
Thermal controller	**Thermal detector**	**Sensor pocket Brass**	**Sensor pocket Stainless steel**	(mm)	(kg)
9900386011	9900387611	990038600Z22	990038600Z32	344	0,5
9900386021	9900387621	990038600Z24	990038600Z34	562	0,7
9900386031	9900387631	990038600Z26	990038600Z36	862	1,0
9900386041	9900387641	990038600Z21	990038600Z31	262	0,4
9900386051	9900387651	990038600Z23	990038600Z33	396	0,6
9900386061	9900387661	990038600Z25	990038600Z35	606	0,8
9900386131	9900387731	990038600Z21	990038600Z31	262	0,4
9900386141	9900387741	990038600Z23	990038600Z33	396	0,6
9900386151	9900387751	990038600Z25	990038600Z35	606	0,8

Steam injector Fig. 651

- Steam injector without moving parts
- Direct condensation of steam for heating water (acc. to DPED 2014/68/EU Fluid group 2)
- The released heat of condensation of the steam is transferred directly to the water
- Mounting position horizontal

(Further informations about the accessories can be found in the appropriate data sheets.)

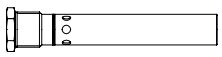

Fig. 651....2

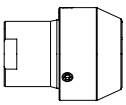
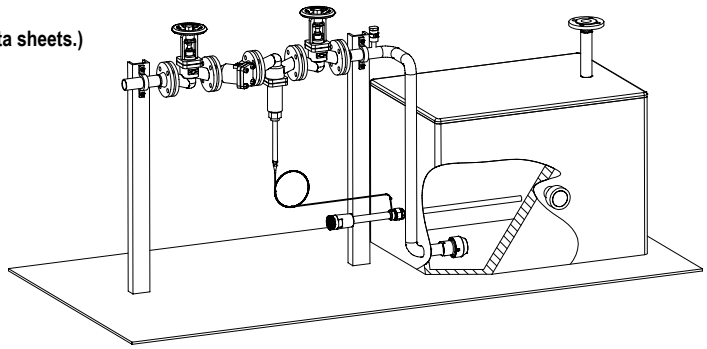
Fig. 651....4