sferaco VALVES & FITTINGS

S-GATE®

REF. 176

KNIFE GATE VALVE PN10 METAL / METAL TIGHTNESS S-GATE

CNAS ISO 9001 : 2008

CE

Certificate 3.1

Size :	DN 50 to DN 300
Ends :	Between flanges PN10
Min Temperature :	-10°C
Max Temperature :	+ 90°C
Max Pressure :	10 Bars up to DN 200
Specifications :	Rising rotating stem , non rising handwheel No tightness Weak head loss

Materials : Cast iron body

KNIFE GATE VALVE PN10 METAL / METAL TIGHTNESS S-GATE

SPECIFICATIONS :

- Opened or closed valve
- Rising rotating stem, non rising handwheel
- **No tightness (loose factor : 2% of Kvs)**
- Weak head loss
- Between flanges PN10
- Full crossing threaded lower holes and blind threaded top holes
- With handwheel
- With lever or chain handwheel (option)
- Possible with bipolar sensor O + C , voltage AC 15-240V 3A, IP66 type XCK M115C
- Deflector (option)
- 50% epoxy 50% polyester painting blue colour RAL 5005

USE :

- Water, water treatment, chemical pulp, powders, food industry, chemistry
- Min and max Temperature Ts : - 10°C to + 90°C

MAX PRESSURE :

DN	50	65	80	100	125	150	200	250	300
Ps (Bars)	10	10	10	10	10	10	10	8	6

KNIFE GATE VALVE PN10 METAL / METAL TIGHTNESS S-GATE

RANGE AND ACCESSORIES :

- Between flanges PN10 cast iron body, SS 304 gate, metal/metal seat with handwheel **Ref. 176** from DN 50 to 300

- Bipolar sensors O + C kit **Ref. 9801351 and 9801352** from DN 50 to DN 300

- Sensor (alone) **Ref. 9801350** from DN 50 to DN 300

- Chain handwheel **Ref. 9801790-9801791** from DN 50 to DN 300

- Chain (per meter) **Ref. 9801795**

- Lever **Ref. 980178** from DN 50 to DN 300

- SS ASTM A351 CF8M Deflector **Ref. 9801800 to 9801808** from DN 50 to DN 300

- SS ASTM A351 CF8M Deflector kit (with flange gasket) **Ref. 9801820 to 9801828** from DN 50 to DN 300

Information provided as an indication and subject to possible modification

KNIFE GATE VALVE PN10 METAL / METAL TIGHTNESS S-GATE

MATERIALS WITH HANDWHEEL (REF. 176) :

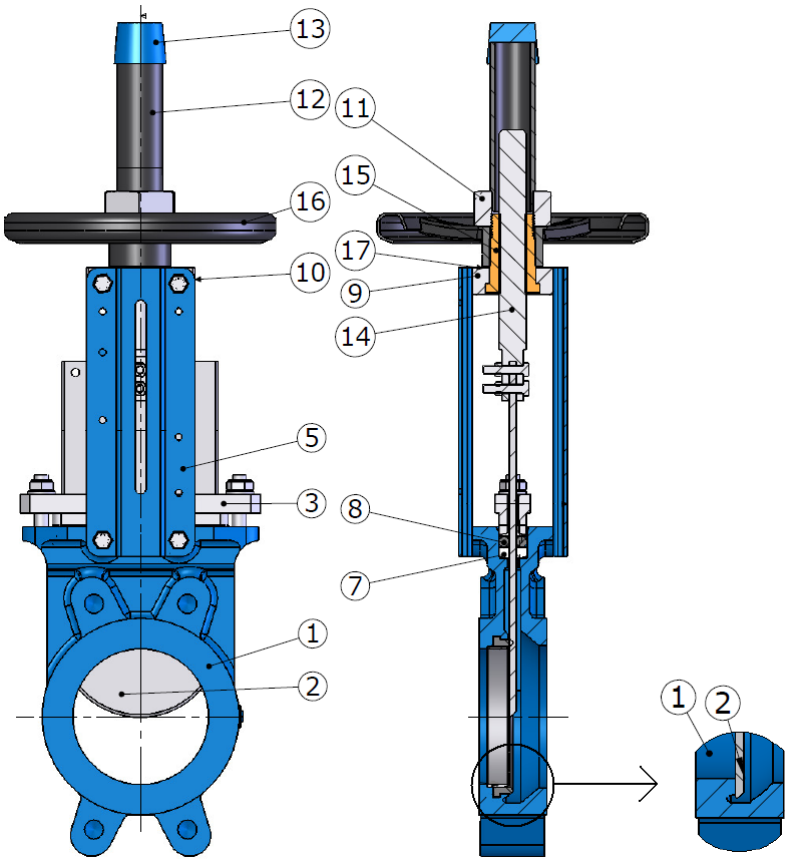

Item	Designation	Materials Ref. 176
1	Body	Cast iron EN GJL-250
2	Gate	AISI 304
3	Packing gland nut	Ductile iron EN GJS-400-15
5	Support	Painted steel
7(+)	Packing (Tress)	PTFE
8(+)	Packing (O ring)	NBR
9	Yoke	Steel
10	Oil hole	Steel
11	Fixing screw	Steel
12	Hood	Steel
13	Hood cover	Plastic
14	Spindle	AISI 304
15	Stem nut	Bronze
16	Handwheel	Steel
17	Washer	Brass

(+) : Included in packing gland kit

Information provided as an indication and subject to possible modification

KNIFE GATE VALVE PN10 METAL / METAL TIGHTNESS S-GATE

MATERIALS WITH CHAIN HANDWHEEL (REF.176 + 980179) :

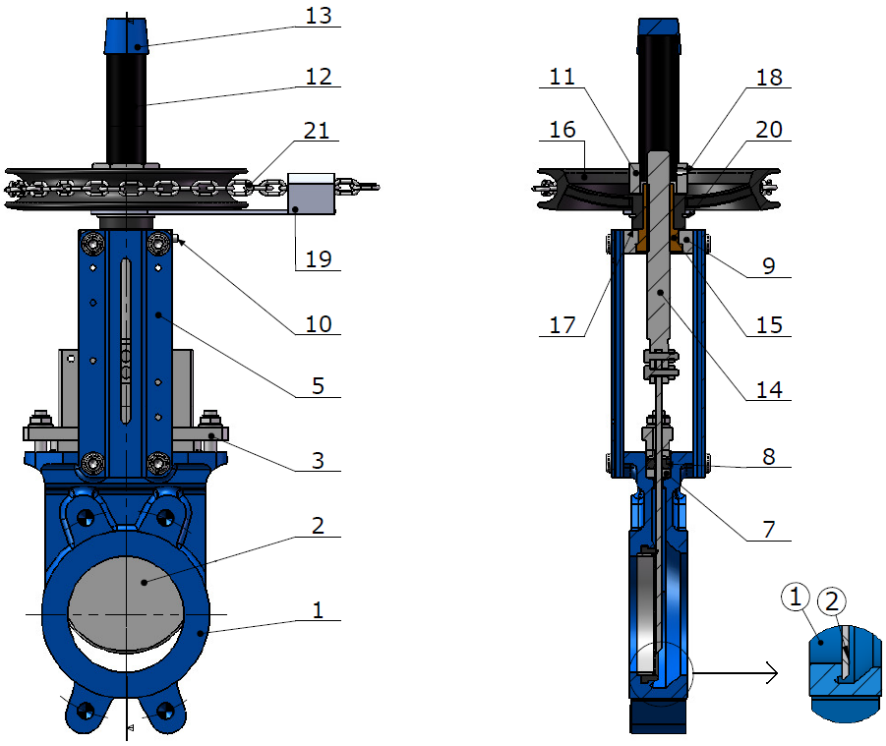

Item	Designation	Materials Ref. 176 + 980179
1	Body	Cast iron EN GJL-250
2	Gate	AISI 304
3	Packing gland nut	Ductile iron EN GJS-400-15
5	Support	Painted steel
7(+)	Packing (Tress)	PTFE
8(+)	Packing (O ring)	NBR
9	Yoke	Steel
10	Oil hole	Steel
11	Fixing screw	Steel
12	Hood	Steel
13	Hood cover	Plastic
14	Spindle	AISI 304
15	Stem nut	Bronze
16	Handwheel	Steel
17	Washer	Brass
18	Fixing screw	AISI 304
19	Chain guide	Cast iron
20	Washer	Brass
21	Chain	Steel or stainless steel

(+) : Included in packing gland kit

Information provided as an indication and subject to possible modification

KNIFE GATE VALVE PN10 METAL / METAL TIGHTNESS S-GATE

MATERIALS WITH LEVER (REF.176 + 980178) :

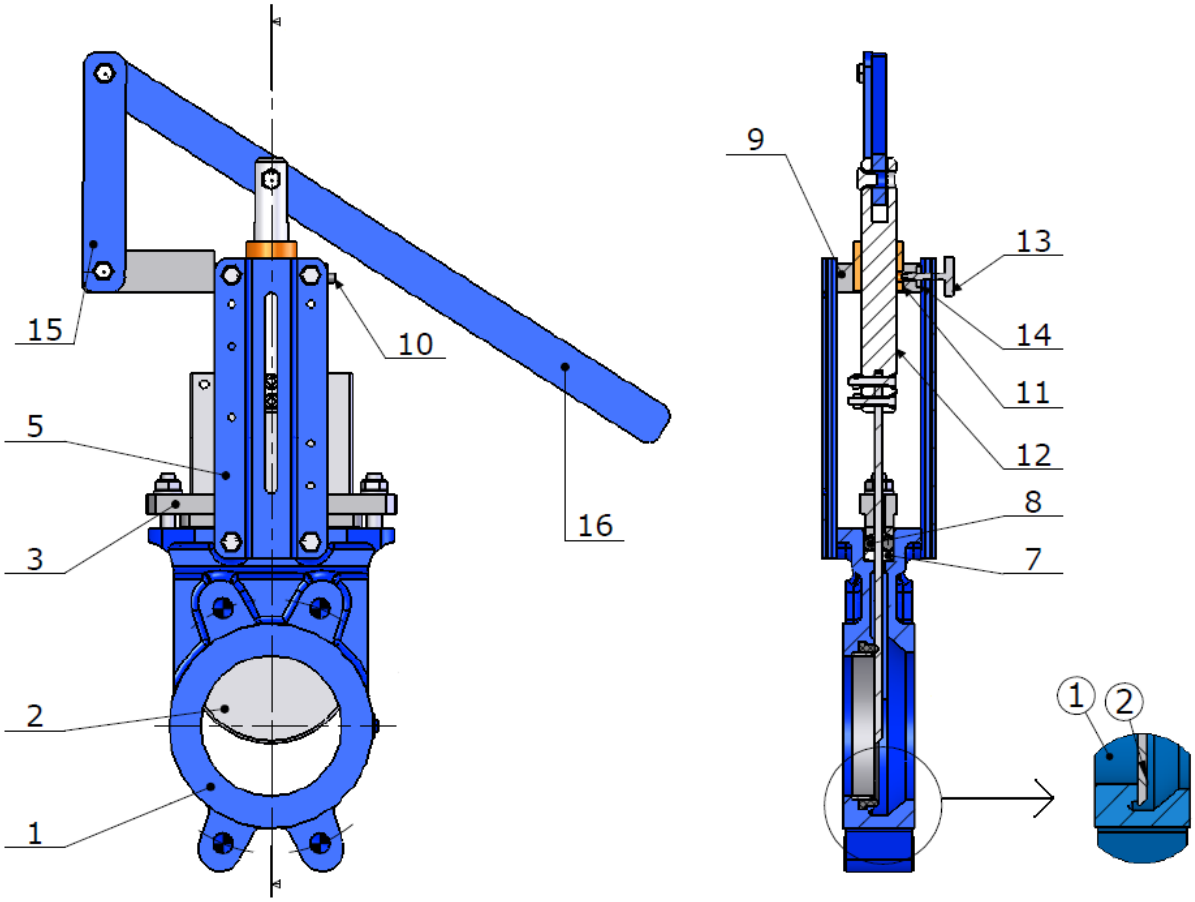

Item	Designation	Materials Ref. 176 + 980178
1	Body	Cast iron EN GJL-250
2	Gate	AISI 304
3	Packing gland nut	Ductile iron EN GJS-400-15
5	Support	Painted steel
7(+)	Packing (Tress)	PTFE
8(+)	Packing (O ring)	NBR
9	Yoke	Steel
10	Oil hole	Steel
11	Stem nut	Bronze
12	Spindle	AISI 304
13	Fixing screw	Steel
14	Wedge	Steel
15	Link	Steel
16	Lever	Steel

(+) : Included in packing gland kit

Information provided as an indication and subject to possible modification

KNIFE GATE VALVE PN10 METAL / METAL TIGHTNESS S-GATE

SIZE WITH HANDWHEEL REF.176 (in mm) :

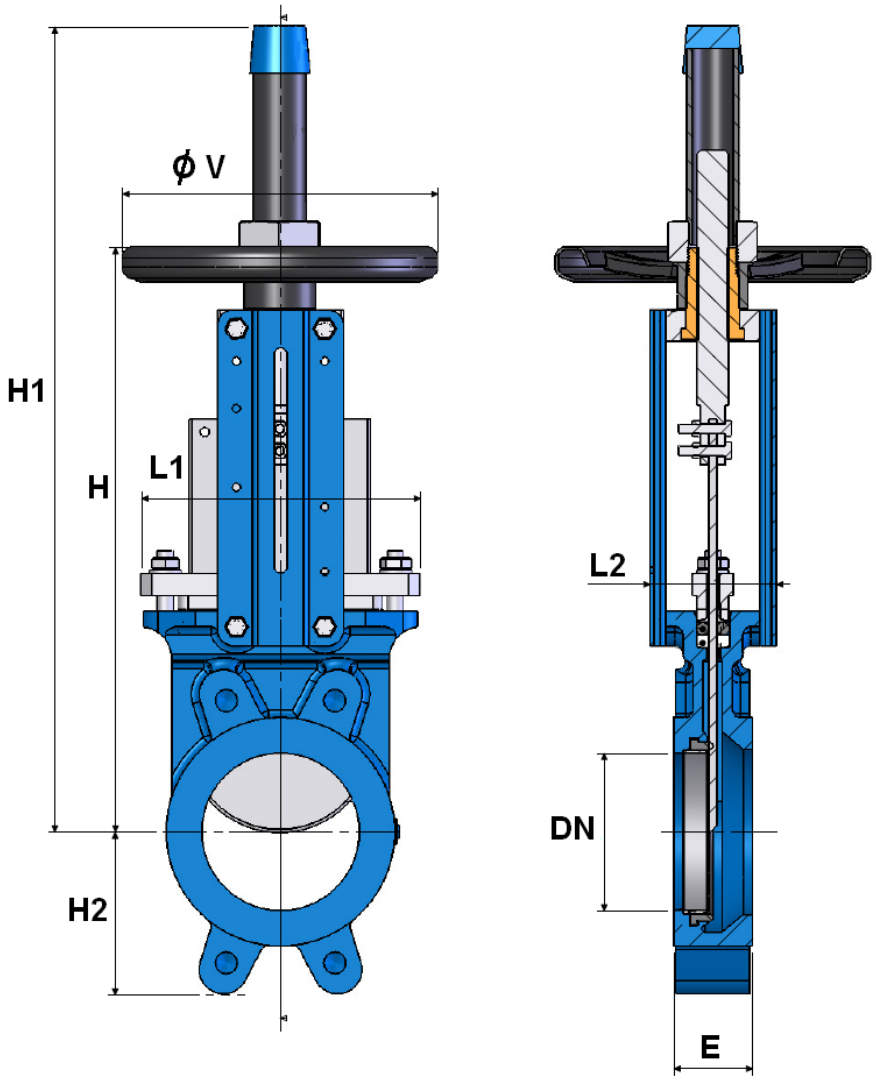

DN	50	65	80	100	125	150	200	250	300
E	40	40	50	50	50	60	60	70	70
H	289	316	342	382	415	458	575	676	776
H1	409	436	462	502	585	637	815	1016	1116
H2	63	70	92	105	120	130	160	198	234
L1	124	139	154	174	192	217	270	326	380
L2	92	92	92	92	102	102	119	119	119
Ø V	185	185	185	185	225	225	325	325	380
Weight (Kg)	6.53	7.1	8.53	9.8	12.7	16.16	26.8	43.5	57.5

Information provided as an indication and subject to possible modification

KNIFE GATE VALVE PN10 METAL / METAL TIGHTNESS S-GATE

SIZE WITH CHAIN HANDWHEEL REF.176 + 980179 (in mm) :

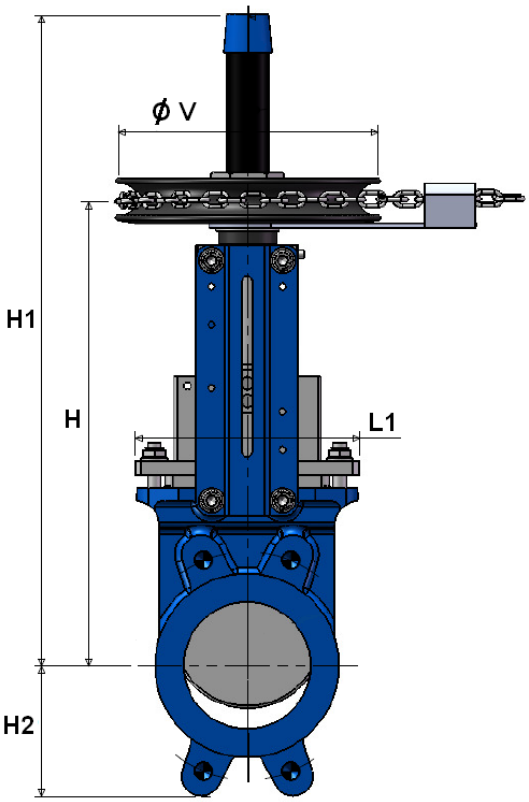

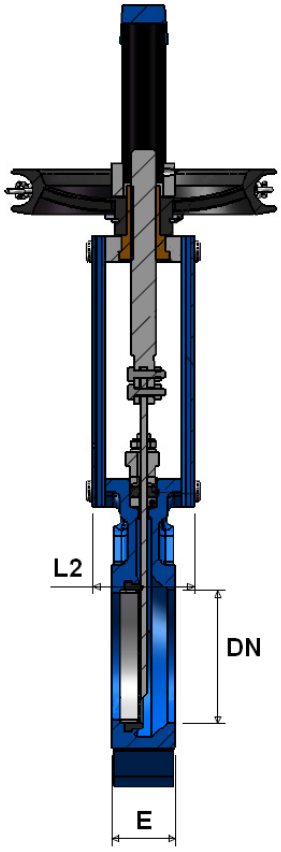

Chain size :

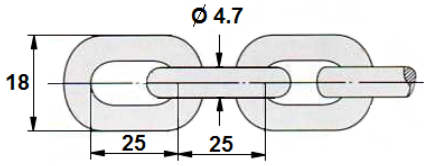

Handwheel size :

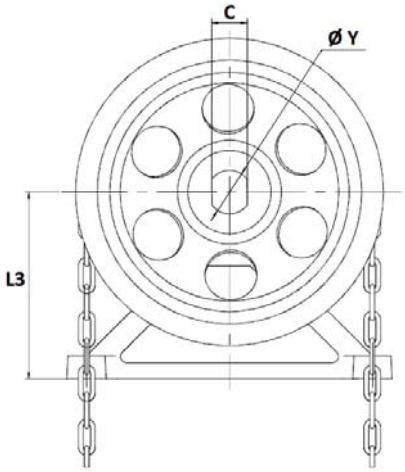

DN	50	65	80	100	125	150	200	250	300
E	40	40	50	50	50	60	60	70	70
H	289	316	342	382	415	458	575	676	776
H1	409	436	462	502	585	637	815	1016	1116
H2	63	70	92	105	120	130	160	198	234
L1	124	139	154	174	192	217	270	326	380
L2	92	92	92	92	102	102	119	119	119
Ø V	212	212	212	212	212	212	296	296	296
Ø Y	34	34	34	34	34	34	42	42	42
C	26	26	26	26	26	26	34	34	34
L3	135	135	135	135	135	135	180	180	180
Weight Ref.176 + 980179 (Kg)	11.4	12	13.4	14.7	17.6	21	34.3	51	65

Sferaco 90 rue du Ruisseau 38297 St Quentin Fallavier Tel: + 33 (0) 474.94.15.90 Fax: + 33 (0) 474.95.62.08 Internet: www.sferaco.fr E-mail : sferaco@sferaco.fr

Information provided as an indication and subject to possible modification

KNIFE GATE VALVE PN10 METAL / METAL TIGHTNESS S-GATE

SIZE WITH LEVER REF.176 + 980178 (in mm) :

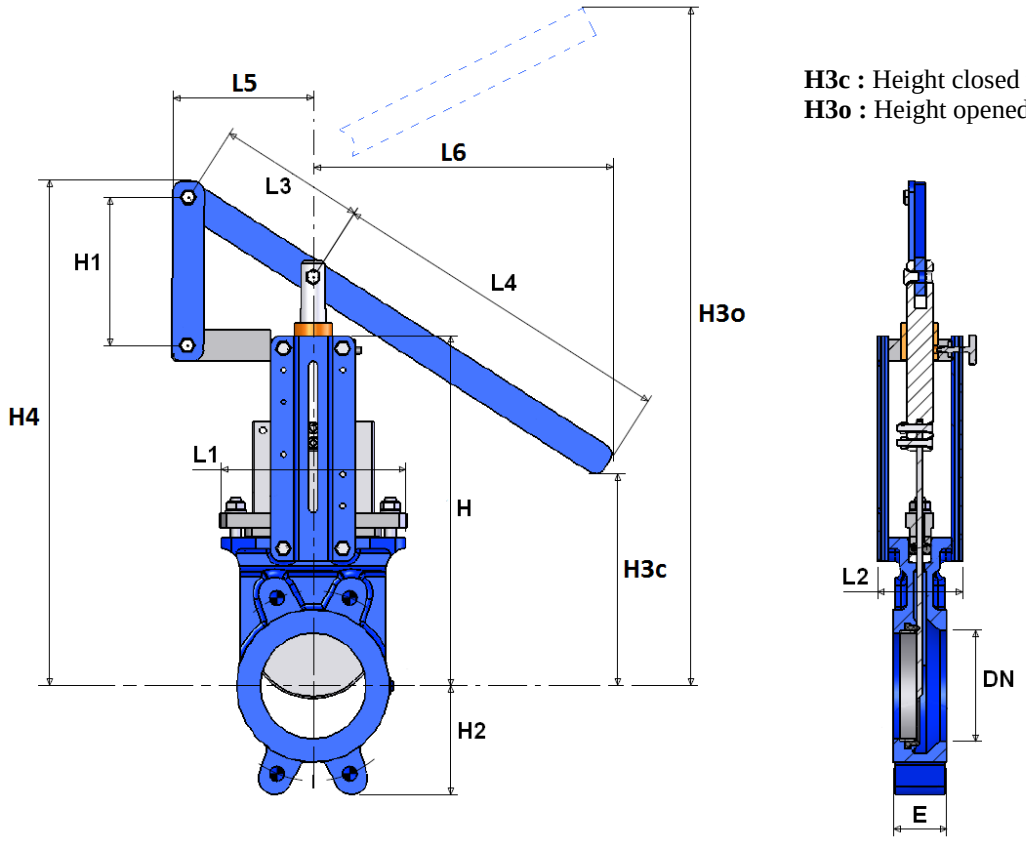

H3c : Height closed valve
H3o : Height opened valve

DN	50	65	80	100	125	150	200	250	300
E	40	40	50	50	50	60	60	70	70
H	240	265	290	335	373	424	533	625	732
H1	125	125	125	125	170	170	190	285	285
H2	63	70	92	105	120	130	160	198	234
H3c (closed)	248	263	277	329	301	262	526	338	248
H3o (opened)	452	526	592	704	858	911	1210	1318	1762
H4	343	370	389	436	511	563	676	868	986
L1	124	139	154	174	189	220	275	326	380
L2	83	83	83	83	93	93	108	108	108
L3	140	140	140	140	140	140	230	230	230
L4	340	340	340	340	440	440	640	680	680
L5	330	330	330	330	430	430	630	630	882
L6	156	156	156	156	156	156	247	247	249
Weight Ref.176+ 980178 (Kg)	8.9	9.8	11	13.3	16	18.9	32.9	53.6	67.3

Information provided as an indication and subject to possible modification

KNIFE GATE VALVE PN10 METAL / METAL TIGHTNESS S-GATE

SIZE FIXING VALVE THREADED HOLES (BETWEEN FLANGES PN10 in mm) :

DN 50 – 65

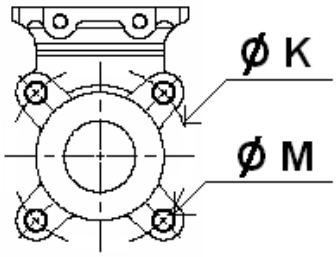

DN 80 – 200

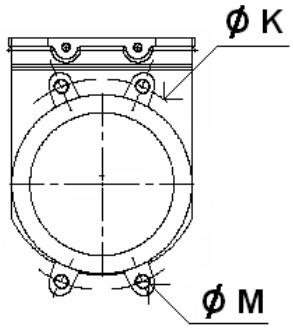

DN 250 - 300

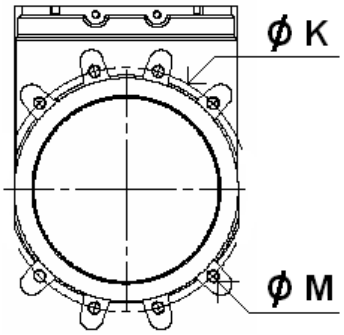

THREADED LENGTH FOR TOP BLIND HOLES :

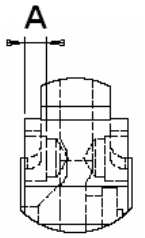

DN	50	65	80	100	125	150	200	250	300
Ø K	125	145	160	180	210	240	295	350	400
Ø M	M16	M16	M16	M16	M16	M20	M20	M20	M20
Nb threaded hole	4	4	4	4	4	4	4	8	8
A	8	8	10	10	10	12	12	15	15

KNIFE GATE VALVE PN10 METAL / METAL TIGHTNESS S-GATE

DEFLECTOR SIZE (in mm) :

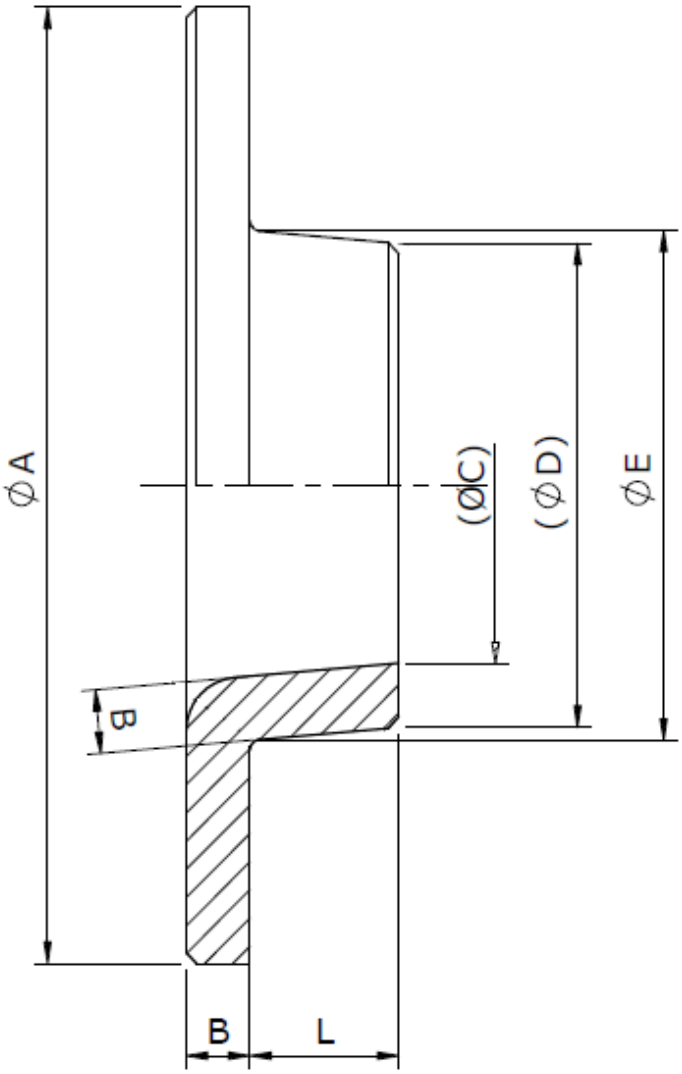

DN	50	65	80	100	125	150	200	250	300	350	400	450	500	600
Ø A	90	105	120	145	170	195	250	310	365	420	472	527	582	683
Ø C	32	47.5	59.5	78.5	104.5	127.5	178.5	226.5	278.5	323.5	374	402.7	451.7	552.7
Ø D	44	59.5	73.5	92.5	118.5	141.5	192.5	240.5	292.5	339.5	390	423.4	472.4	573.4
Ø E	48	63	78	98	123	148	198	247	297	347	397	447	497	597
B	6	6	7	7	7	7	7	7	7	8	8	10	10	8
L	14	14	19	19	18.5	23.5	22.5	27	26	39	40	44	46	44

KNIFE GATE VALVE PN10 METAL / METAL TIGHTNESS S-GATE

SENSOR SIZE (in mm) AND SCHEMA :

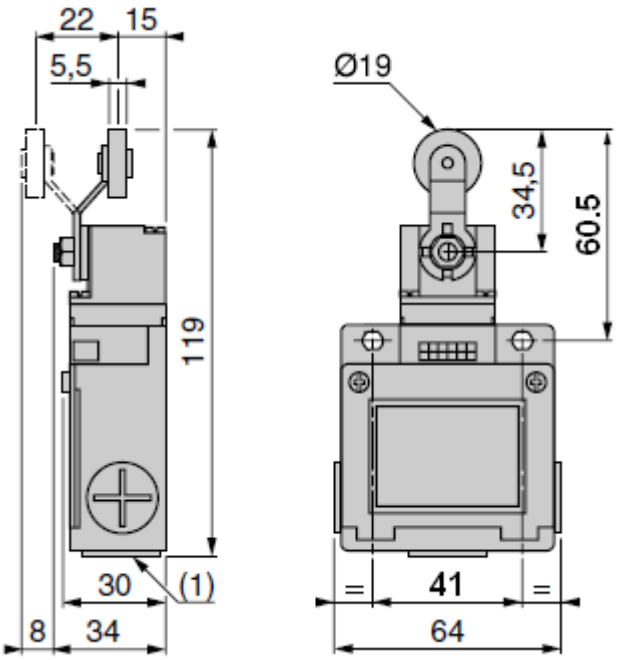

Bipolar sensor O + C
(XE2S P2151)

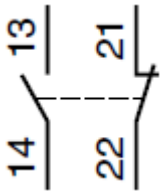

STANDARDS :

- Fabrication according to ISO 9001 : 2008
- DIRECTIVE 97/23/CE : Risk category I Module A
- Certificate 3.1 on request
- Between flanges PN10 according to EN 1092-1 PN10

ADVICE : Our opinion and our advice are not guaranteed and SFERACO shall not be liable for the consequences of damages.
The customer must check the right choice of the products with the real service conditions.

KNIFE GATE VALVE PN10 METAL / METAL TIGHTNESS S-GATE

INSTALLATION INSTRUCTIONS :

GENERAL GUIDELINES :

- Ensure that the valves to be used are appropriate for the conditions of the installation (type of fluid,pressure and temperature).
- Be sure to have enough valves to be able to isolate the sections of piping as well as the appropriate equipment for maintenance and repair.
- Ensure that the valves to be installed are of correct strenght to be able to support the capacity of their usage.
- **Installation of all circuits should ensure that their function can be automatically tested on a regular basis (at least two times a year).**

INSTALLATION INSTRUCTIONS :

- **Before installing the valves,clean and remove any objects from the pipes** (in particular bits of sealing and metal) which could obstruct and block the valves.
- **Ensure that both connecting pipes either side of the valve (upstream and downstream) are aligned (if they're not,the valves may not work correctly).**
- **Make sure that the two sections of the pipe (upstream and downstream) match,the valve unit will not absorb any gaps.Any distortions in the pipes may affect the thightness of the connection,the working of the valve and can even cause a rupture.**To be sure,place the kit in position to ensure the assembling will work.
- **If sections of piping do not have their final support in place,they should be temporarily fixed.This is to avoid unnecessary strain on the valve.**
- During installation operation , do not carry the valves by the handwheel.
- Valves can be installed in all positions but we recommend the above positions :

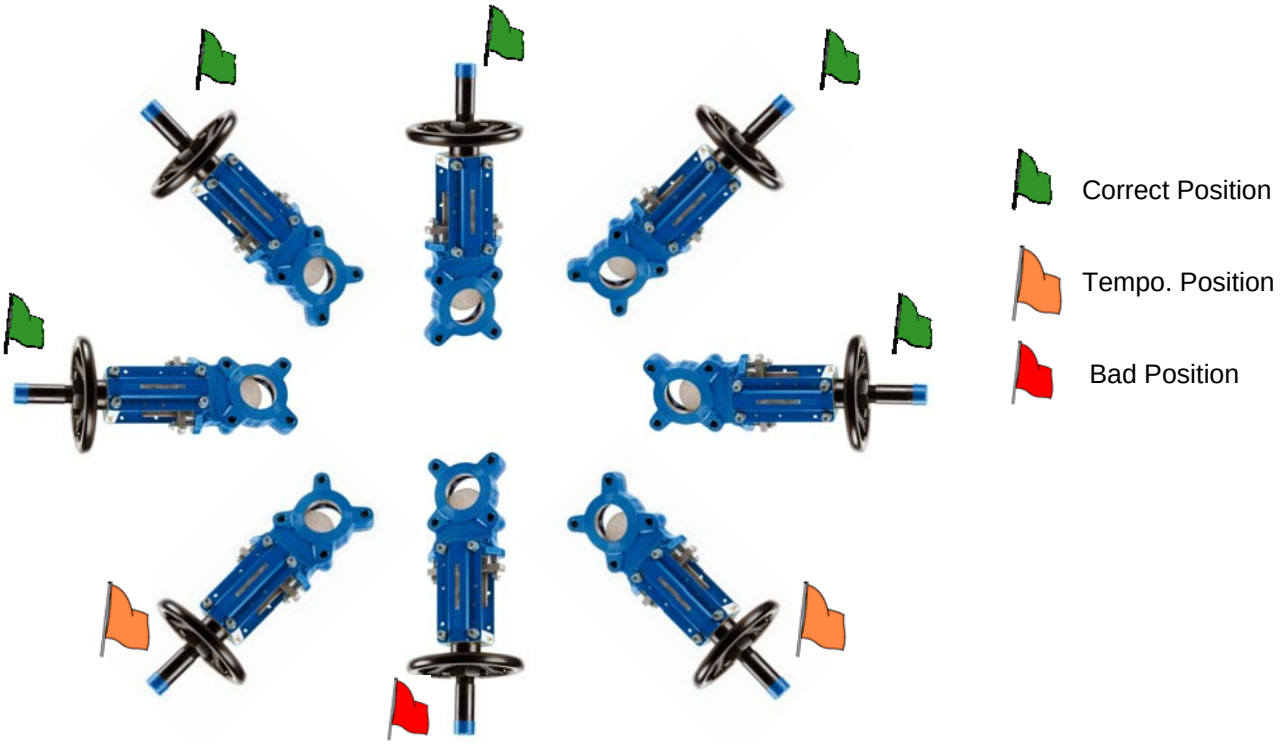

KNIFE GATE VALVE PN10 METAL / METAL TIGHTNESS S-GATE

INSTALLATION INSTRUCTIONS (SUITE) :

- If the valve is installed at the end of the pipe, it must be between 2 flanges.
- The knife gate valves are unidirectional, respect the flow direction indicated on the body by the arrow. When using powders, inverse flow direction
- Tighten the bolts in cross. For blind holes, use studs to have a good tightening and tighten them carrefully so that they don't touch the gate.
- During cleaning operation, the valves must be opened.
- Tests must be done with cleaned installation and pipe.
- Test must be done with partially opened valve. Test pressure must not exceed valve specification according to ISO 5208.
- Open carrefully the valve.
- Tighten the gland packing at the first start of the installation (with a moderate torque) so that there's no leakage and the handwheel is easy to operate. Make sure there's no contact between the gate and the gland.
- Keep greased the stem.
- It's recommended to operate the valve (open and close) 1 time per month

Sferaco 90 rue du Ruisseau 38297 St Quentin Fallavier Tel: + 33 (0) 474.94.15.90 Fax: + 33 (0) 474.95.62.08 Internet: www.sferaco.fr E-mail : sferaco@sferaco.fr

Information provided as an indication and subject to possible modification