sferaco VALVES & FITTINGS

S-GATE®

REF. 170-171-172

KNIFE GATE VALVE PN10 S-GATE

CNAS ISO 9001 : 2008

CE

Certificate 3.1

Size :	DN 50 to DN 800
Ends :	Between flanges PN10
Min Temperature :	-10°C for NBR seat (-15°C for EPDM)
Max Temperature :	+ 90°C for NBR seat (+ 110°C for EPDM)
Max Pressure :	10 Bars up to DN 200
Specifications :	Rising rotating stem , non rising handwheel Unidirectional tightness Weak head loss
Materials :	Cast iron or Stainless steel

KNIFE GATE VALVE PN10 S-GATE

SPECIFICATIONS :

- Opened or closed valve
- Rising rotating stem, non rising handwheel
- Unidirectional tightness (Respect the flow direction indicated by the arrow)
- Weak head loss
- Between flanges PN10
- Full crossing threaded lower holes and blind threaded top holes
- With handwheel
- With lever or chain handwheel (option)
- Possible with bipolar sensor O + C , voltage AC 15-240V 3A, IP66 type XCK M115C
- Deflector (option)
- 50% epoxy 50% polyester painting blue colour RAL 5005
- Other seats on request (FKM, PTFE, SILICONE …)

USE :

- Water, water treatment, chemical pulp, powders, food industry, chemistry
- Min and max Temperature Ts : - 10°C to + 90°C for cast iron body with NBR seat **Ref.170**
- Min and max Temperature Ts : - 15°C to + 110°C for cast iron body with EPDM seat **Ref.171**
- Min and max Temperature Ts : - 15°C to + 110°C for stainless steel body with EPDM seat **Ref.172**
- Min and max Temperature Ts : - 15°C to + 110°C with **WHITE EPDM** seat(on request)
- Min and max Temperature Ts : - 10°C to + 180°C with **FKM** seat(on request)
- Min and max Temperature Ts : + 0°C to + 180°C with **PTFE** seat (on request)
- Min and max Temperature Ts : - 20°C to + 200°C with **SILICONE** seat (on request)
- When using powders, inverse flow direction

MAX PRESSURE :

DN	50	65	80	100	125	150	200	250	300	350	400	450	500	600	700-800
Ps (Bars)	**10**	**10**	**10**	**10**	**10**	**10**	**10**	**8**	**6**	**4**	**4**	**3**	**3**	**3**	**2**

MIN AND MAX SEAT TEMPERATURES WITH REFERENCES :

SEAT	TEMPERATURE	DN 50	DN 65	DN 80	DN 100	DN 125	DN 150	DN 200	DN 250	DN 300
NBR	**-10°C à +90°C**	**9801851**	**9801852**	**9801853**	**9801854**	**9801855**	**9801856**	**9801857**	**9801858**	**9801859**
EPDM	-15°C à +110°C	9801870	9801871	9801872	9801873	9801874	9801875	9801876	9801877	9801878
WHITE EPDM	-15°C à +110°C	**9802170**	**9802171**	**9802172**	**9802173**	**9802174**	**9802175**	**9802176**	**9802177**	**9802178**
FKM	-10°C à +180°C	9801910	9801911	9801912	9801913	9801914	9801915	9801916	9801917	9801918
PTFE	**+0°C à +180°C**	**9801890**	**9801891**	**9801892**	**9801893**	**9801894**	**9801895**	**9801896**	**9801897**	**9801898**
SILICONE	-20°C à +200°C	9801930	9801931	9801932	9801933	9801934	9801935	9801936	9801937	9801938

SEAT	TEMPERATURE	DN 350	DN 400	DN 450	DN 500	DN 600	DN 700
NBR	**-10°C à +90°C**	**9801860**	**9801861**	**9801862**	**9801863**	**9801864**	**9801865**
EPDM	-15°C à +110°C	9801879	9801880	9801881	9801882	9801883	9801884
WHITE EPDM	-15°C à +110°C	**9802179**	**9802180**	**9802181**	**9802182**	**9802183**	**9802184**
FKM	-10°C à +180°C	9801919	9801920	-	-	-	-
PTFE	**+0°C à +180°C**	**9801899**	**9801900**	-	-	-	-
SILICONE	-20°C à +200°C	9801939	9801940	-	-	-	-

Information provided as an indication and subject to possible modification

KNIFE GATE VALVE PN10 S-GATE

RANGE AND ACCESSORIES :

- Between flanges PN10 cast iron body, SS 304 gate , NBR seat, with handwheel **Ref. 170** from DN 50 to DN 800
- Between flanges PN10 cast iron body, SS 304 gate, EPDM seat, with handwheel **Ref. 171** from DN 50 to DN 800

- Between flanges PN10 , CF8M body, SS 316 gate , EPDM seat, with handwheel **Ref. 172** from DN 50 to DN 600

- Between flanges PN10 cast iron body, SS 304 gate , NBR seat, with handwheel and sensor **Ref. 170101 to 170801** from DN 100 to DN 800

- Bipolar sensors O + C kit **Ref. 9801351 and 9801352** from DN 50 to DN 300

- Sensor (alone) **Ref. 9801350** from DN 50 to DN 700

- Chain handwheel **Ref. 9801790-9801792** from DN 50 to DN 600

- Chain (per meter) **Ref. 9801795**

KNIFE GATE VALVE PN10 S-GATE

RANGE AND ACCESSORIES (SUITE) :

- Lever **Ref. 980178** from DN 50 to DN 300

- SS ASTM A351 CF8M Deflector **Ref. 9801800 to 9801813** from DN 50 to DN 600

- SS ASTM A351 CF8M Deflector kit (with flange gasket) **Ref. 9801820 to 9801837** from DN 50 to DN 600

- Stainless steel support with bolting **Ref. 9802001 to 9802011** from DN 50 to DN 400

Information provided as an indication and subject to possible modification

KNIFE GATE VALVE PN10 S-GATE

MATERIALS WITH HANDWHEEL (REF. 170 , 171 AND 172) :

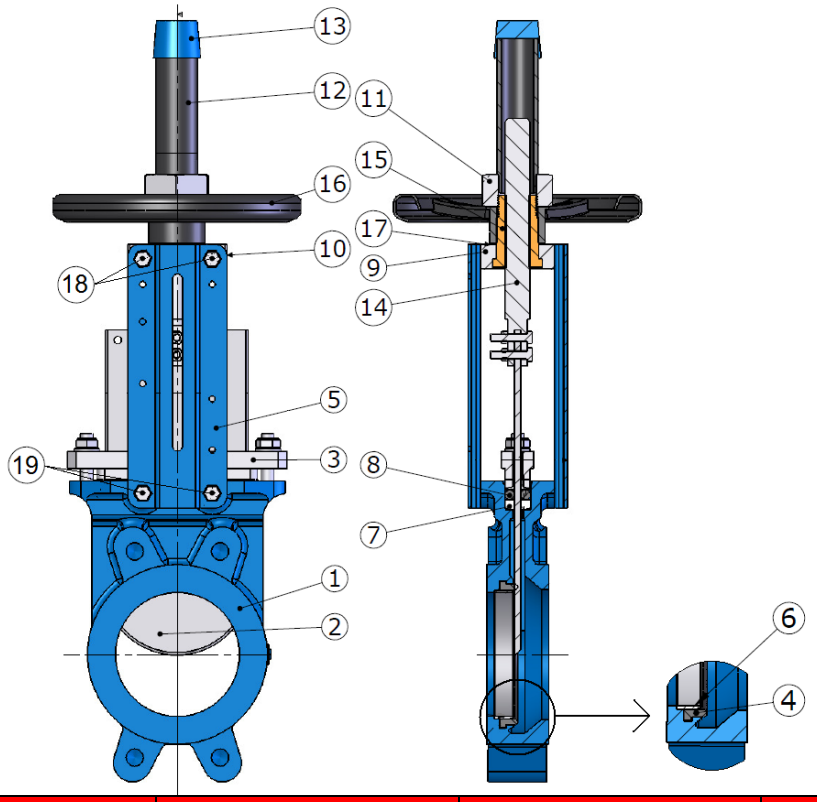

(*) : Included in seat seal kit

(+) : Included in packing gland kit

Item	Designation	Materials Ref. 170	Materials Ref. 171	Materials Ref. 172
1	Body	Cast iron EN GJL-250	Cast iron EN GJL-250	ASTM A351 CF8M
2	Gate	AISI 304	AISI 304	AISI 316
3	Packing gland nut	Ductile iron EN GJS-400-15	Ductile iron EN GJS-400-15	ASTM A351 CF8M
4(*)	Seat	NBR	EPDM	EPDM
5	Support	Painted steel	Painted steel	Painted steel
6(*)	Retainer	AISI 304	AISI 304	AISI 316
7(+)	Packing (Tress)	PTFE	PTFE	PTFE
8(+)	Packing (O ring)	NBR	EPDM	EPDM
9	Yoke	Steel	Steel	Steel
10	Greaser	Brass	Brass	Brass
11	Fixing screw	Steel	Steel	Steel
12	Hood	Steel	Steel	Steel
13	Hood cover	Plastic	Plastic	Plastic
14	Spindle	AISI 304		
15	Stem nut	Bronze	Bronze	Bronze
16	Handwheel	Steel	Steel	Steel
17	Washer	Brass	Brass	Brass
18	Upper screw	Steel	Steel	Steel
19	Lower screw	Steel	Steel	Stainless steel

Information provided as an indication and subject to possible modification

KNIFE GATE VALVE PN10 S-GATE

MATERIALS WITH CHAIN HANDWHEEL :

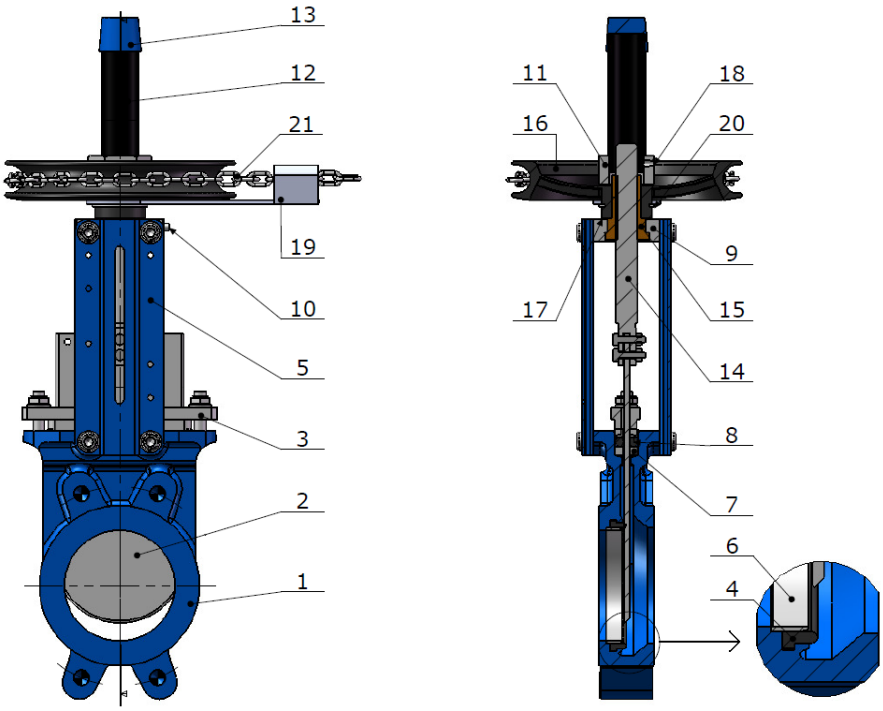

(*) : Included in seat seal kit

(+) : Included in packing gland kit

Item	Designation	Materials Ref. 170 + 980179	Materials Ref. 171 + 980179	Materials Ref. 172 + 980179
1	Body	Cast iron EN GJL-250	Cast iron EN GJL-250	ASTM A351 CF8M
2	Gate	AISI 304	AISI 304	AISI 316
3	Packing gland nut	Ductile iron EN GJS-400-15	Ductile iron EN GJS-400-15	ASTM A351 CF8M
4(*)	Seat	NBR	EPDM	EPDM
5	Support	Painted steel	Painted steel	Painted steel
6(*)	Retainer	AISI 304	AISI 304	AISI 316
7(+)	Packing (Tress)	PTFE	PTFE	PTFE
8(+)	Packing (O ring)	NBR	EPDM	EPDM
9	Yoke	Steel	Steel	Steel
10	Oil hole	Steel	Steel	Steel
11	Fixing screw	Steel	Steel	Steel
12	Hood	Steel	Steel	Steel
13	Hood cover	Plastic	Plastic	Plastic
14	Spindle	AISI 304		
15	Stem nut	Bronze	Bronze	Bronze
16	Handwheel	Steel	Steel	Steel
17	Washer	Brass	Brass	Brass
18	Fixing screw	AISI 304		
19	Chain guide	Cast iron	Cast iron	Cast iron
20	Washer	Brass	Brass	Brass
21	Chain	Steel or stainless steel	Steel or stainless steel	Steel or stainless steel

Information provided as an indication and subject to possible modification

KNIFE GATE VALVE PN10 S-GATE

MATERIALS WITH LEVER :

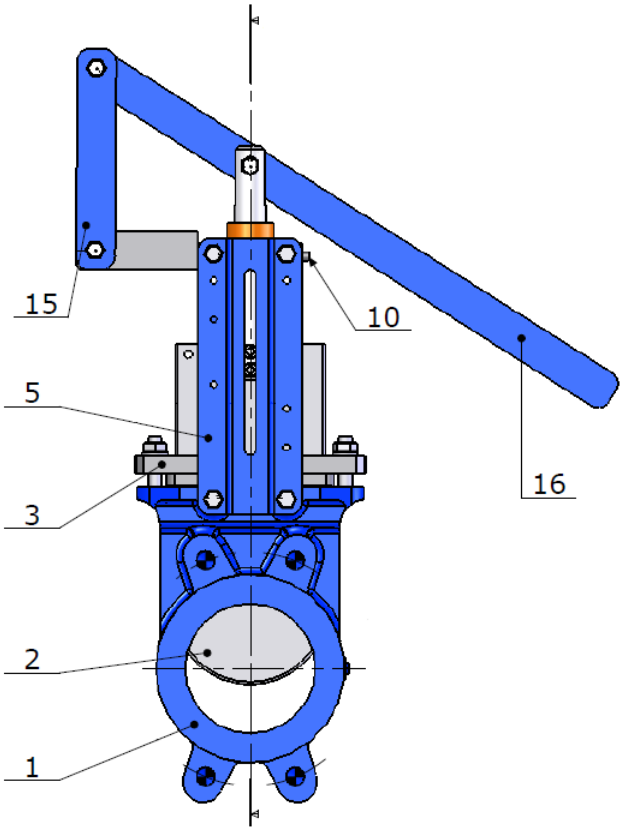

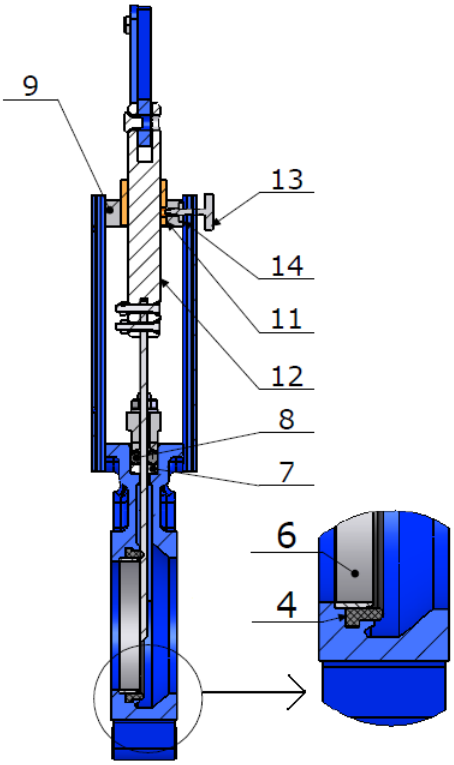

(*) : : Included in seat seal kit

(+) : : Included in packing gland kit

Item	Designation	Materials Ref. 170 + 980178	Materials Ref. 171 + 980178	Materials Ref. 172 + 980178
1	Body	Cast iron EN GJL-250	Cast iron EN GJL-250	ASTM A351 CF8M
2	Gate	AISI 304	AISI 304	AISI 316
3	Packing gland nut	Ductile iron EN GJS-400-15	Ductile iron EN GJS-400-15	ASTM A351 CF8M
4(*)	Seat	NBR	EPDM	EPDM
5	Support	Painted steel	Painted steel	Painted steel
6(*)	Retainer	AISI 304	AISI 304	AISI 316
7(+)	Packing (Tress)	PTFE	PTFE	PTFE
8(+)	Packing (O ring)	NBR	EPDM	EPDM
9	Yoke	Steel	Steel	Steel
10	Oil hole	Steel	Steel	Steel
11	Stem nut	Bronze	Bronze	Bronze
12	Spindle	AISI 304		
13	Fixing screw	Steel	Steel	Steel
14	Wedge	Steel	Steel	Steel
15	Link	Steel	Steel	Steel
16	Lever	Steel	Steel	Steel

Information provided as an indication and subject to possible modification

KNIFE GATE VALVE PN10 S-GATE

SIZE WITH HANDWHEEL REF.170-171-172 (in mm) :

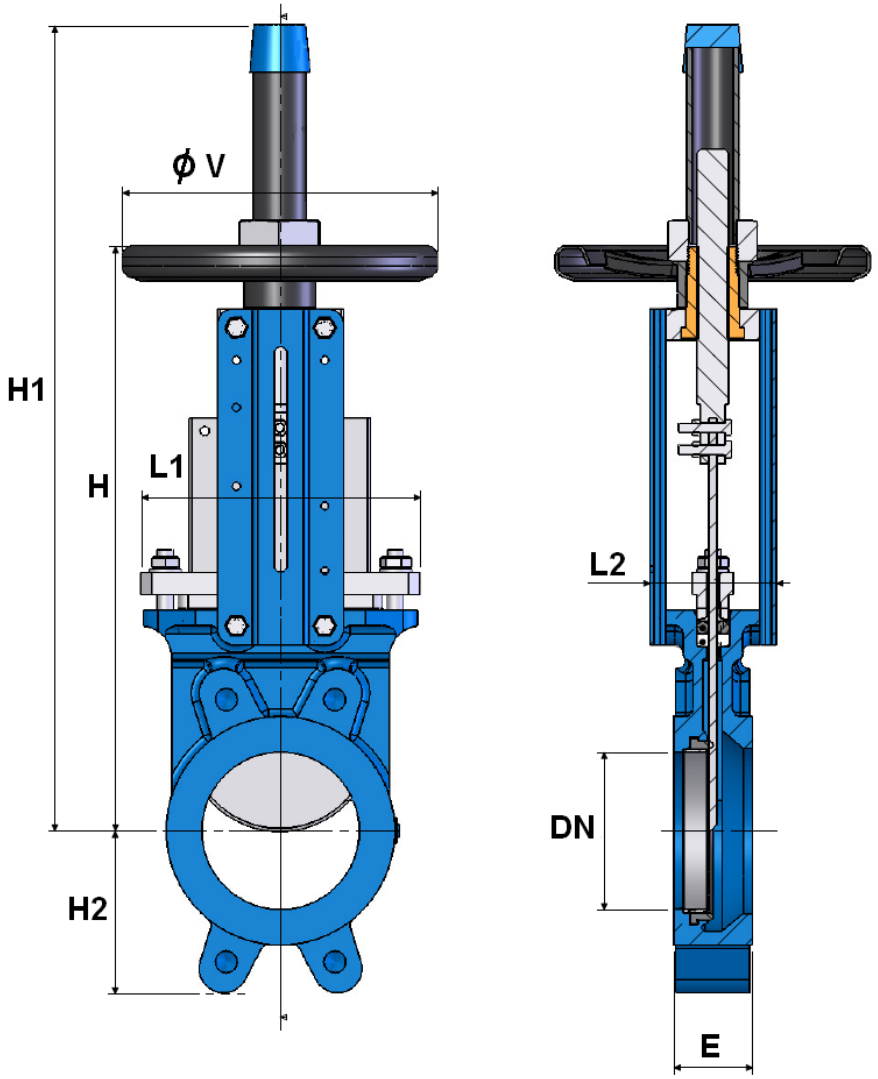

DN	50	65	80	100	125	150	200	250	300	350	400	450	500	600	700	800
E	40	40	50	50	50	60	60	70	70	96	100	106	110	110	110	110
H	289	316	342	382	415	458	575	676	776	906	1012	1098	1210	1416	1611	1870
H1	409	436	462	502	585	637	815	1016	1116	1336	1442	1628	1740	2046	2461	2820
H2	63	70	92	105	120	130	160	198	234	256	292	308	340	400	452	505
L1	124	139	154	174	192	217	270	326	380	438	493	546	620	714	830	970
L2	92	92	92	92	102	102	119	119	119	290	290	290	290	290	320	320
Ø V	200	200	200	200	250	250	300	300	300	500	500	500	500	500	800	800
Weig. Ref.170 and 171 (Kg)	6.53	7.1	8.53	9.8	12.7	16.16	26.8	43.5	57.5	108	132	170	210	298	446	524
Weig. Ref.172(Kg)	6.52	7.81	8.48	10.06	12.7	15.8	27.8	44.6	58.6	110	150	170	210	298	-	-

Sferaco 90 rue du Ruisseau 38297 St Quentin Fallavier Tel: + 33 (0) 474.94.15.90 Fax: + 33 (0) 474.95.62.08 Internet: www.sferaco.fr E-mail : sferaco@sferaco.fr

Information provided as an indication and subject to possible modification

KNIFE GATE VALVE PN10 S-GATE

SIZE WITH CHAIN HANDWHEEL REF.170-171-172 + 980179 (in mm) :

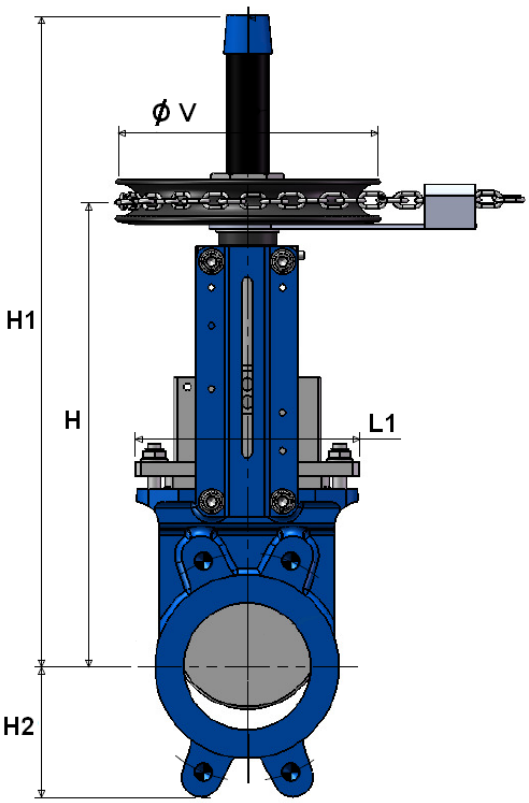

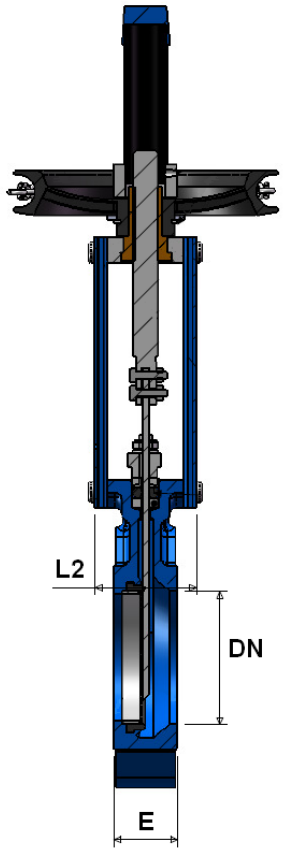

Chain size :

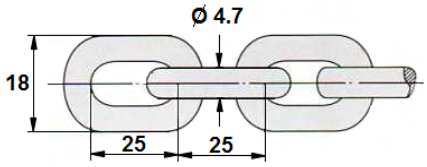

Handwheel size :

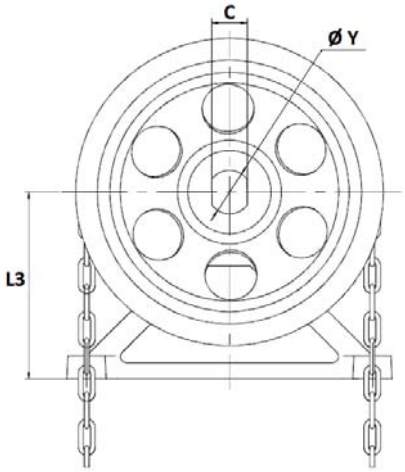

DN	50	65	80	100	125	150	200	250	300	350	400	450	500	600
E	40	40	50	50	50	60	60	70	70	96	100	106	110	110
H	289	316	342	382	415	458	575	676	776	906	1012	1098	1210	1416
H1	409	436	462	502	585	637	815	1016	1116	1336	1442	1628	1740	2046
H2	63	70	92	105	120	130	160	198	234	256	292	308	340	400
L1	124	139	154	174	192	217	270	326	380	438	493	546	620	714
L2	92	92	92	92	102	102	119	119	119	290	290	290	290	290
Ø V	212	212	212	212	212	212	296	296	296	482	482	482	482	482
Ø Y	34	34	34	34	34	34	42	42	42	52	52	52	52	52
C	26	26	26	26	26	26	34	34	34	44	44	44	44	44
L3	135	135	135	135	135	135	180	180	180	278	278	278	278	278
Weig. Ref.170 or 171 + 980179 (Kg)	11.4	12	13.4	14.7	17.6	21	34.3	51	65	122.5	146.5	184.5	224.5	312.5
Weig. Ref.172 + 980179 (Kg	11.4	12.7	13.4	14.9	17.6	20.7	35.3	52.1	66.1	124.5	164.5	-	-	-

Information provided as an indication and subject to possible modification

KNIFE GATE VALVE PN10 S-GATE

SIZE WITH LEVER REF.170-171-172 + 980178 (in mm) :

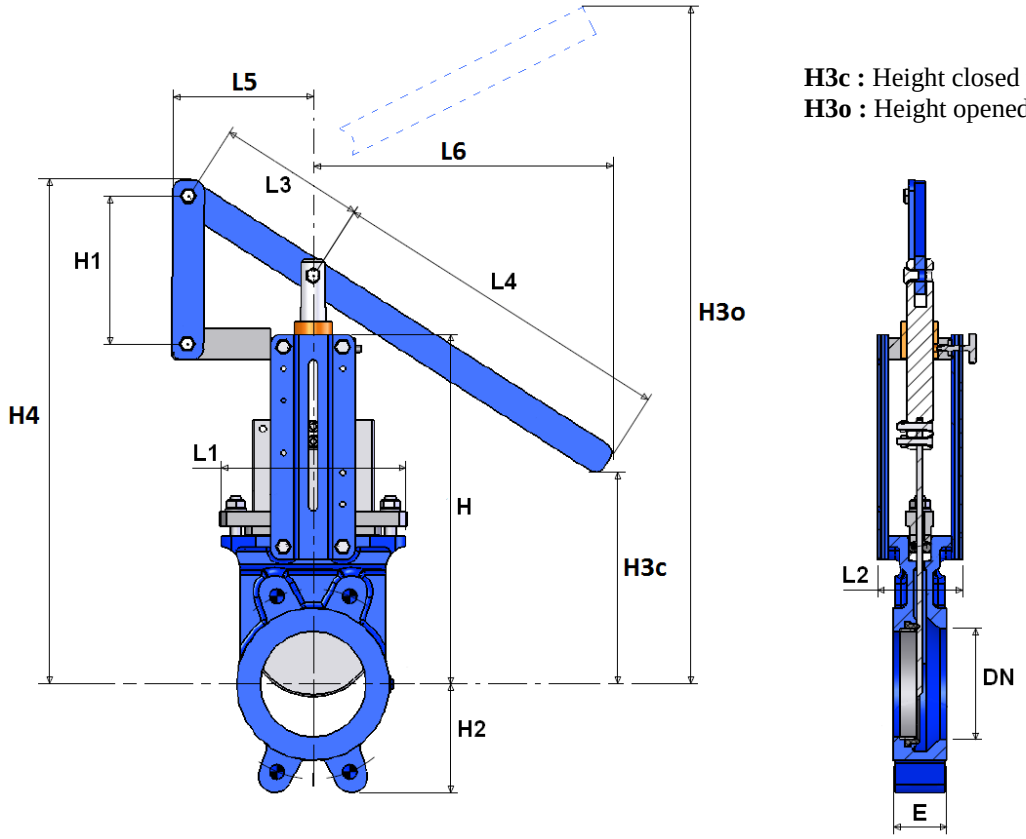

H3c : Height closed valve
H3o : Height opened valve

DN	50	65	80	100	125	150	200	250	300
E	40	40	50	50	50	60	60	70	70
H	240	265	290	335	373	424	533	625	732
H1	125	125	125	125	170	170	190	285	285
H2	63	70	92	105	120	130	160	198	234
H3c (closed)	248	263	277	329	301	262	526	338	248
H3o (opened)	452	526	592	704	858	911	1210	1318	1762
H4	343	370	389	436	511	563	676	868	986
L1	124	139	154	174	189	220	275	326	380
L2	83	83	83	83	93	93	108	108	108
L3	140	140	140	140	140	140	230	230	230
L4	340	340	340	340	440	440	640	680	680
L5	330	330	330	330	430	430	630	630	882
L6	156	156	156	156	156	156	247	247	249
Weig. Ref.170,171 or 172+ 980178 (Kg)	8.9	9.8	11	13.3	16	18.9	32.9	53.6	67.3

Information provided as an indication and subject to possible modification

KNIFE GATE VALVE PN10 S-GATE

SIZE FIXING VALVE THREADED HOLES (BETWEEN FLANGES PN10 in mm) :

DN 50 – 65

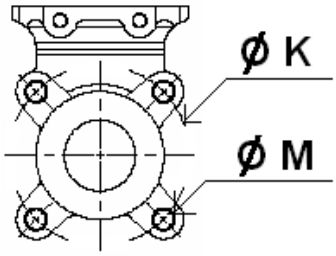

DN 80 – 200

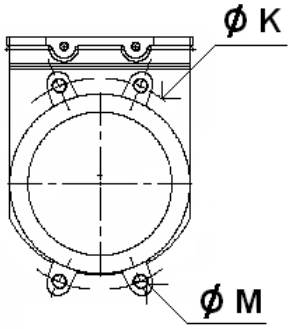

DN 250 - 300

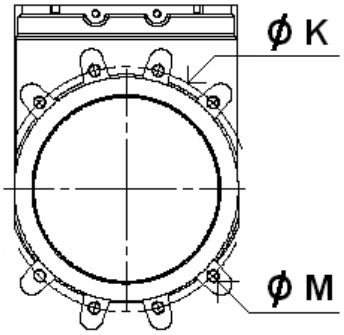

DN 350 – 400

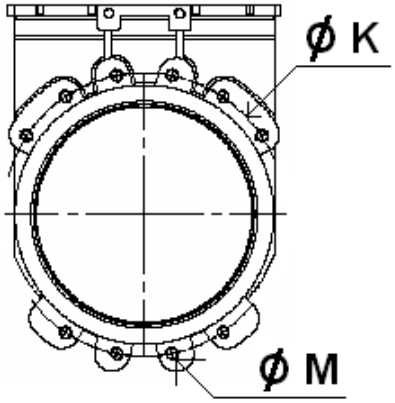

DN 450 – 600

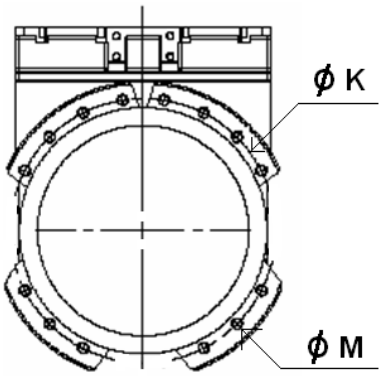

DN 700-800

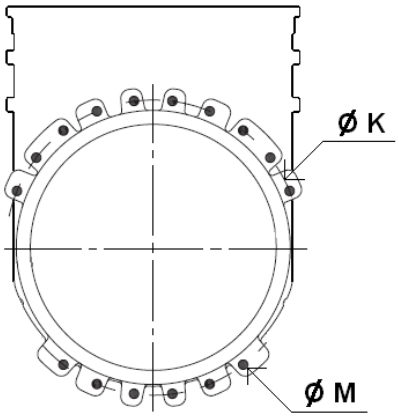

THREADED LENGHT FOR TOP BLIND HOLES :

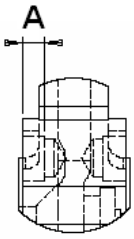

DN	50	65	80	100	125	150	200	250	300	350	400	450	500	600	700	800
Ø K	125	145	160	180	210	240	295	350	400	460	515	565	620	725	840	950
Ø M	M16	M16	M16	M16	M16	M20	M20	M20	M20	M20	M24	M24	M24	M27	M27	M30
Nb threaded hole	4	4	4	4	4	4	4	8	8	10	10	14	14	14	16	16
A	8	8	10	10	10	12	12	15	15	19	20	24	24	22	22	20

Information provided as an indication and subject to possible modification

KNIFE GATE VALVE PN10 S-GATE

DEFLECTOR SIZE (in mm) :

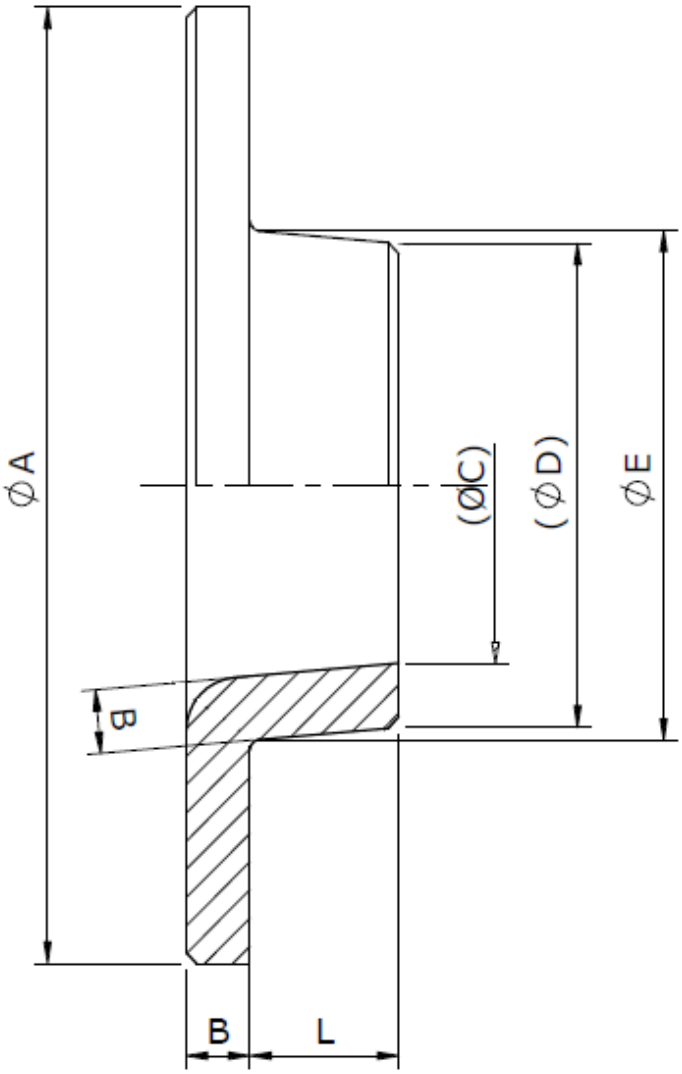

DN	50	65	80	100	125	150	200	250	300	350	400	450	500	600
Ø A	90	105	120	145	170	195	250	310	365	420	472	527	582	683
Ø C	32	47.5	59.5	78.5	104.5	127.5	178.5	226.5	278.5	323.5	374	402.7	451.7	552.7
Ø D	44	59.5	73.5	92.5	118.5	141.5	192.5	240.5	292.5	339.5	390	423.4	472.4	573.4
Ø E	48	63	78	98	123	148	198	247	297	347	397	447	497	597
B	6	6	7	7	7	7	7	7	7	8	8	10	10	8
L	14	14	19	19	18.5	23.5	22.5	27	26	39	40	44	46	44

Information provided as an indication and subject to possible modification

KNIFE GATE VALVE PN10 S-GATE

SENSOR SIZE (in mm) AND SCHEMA :

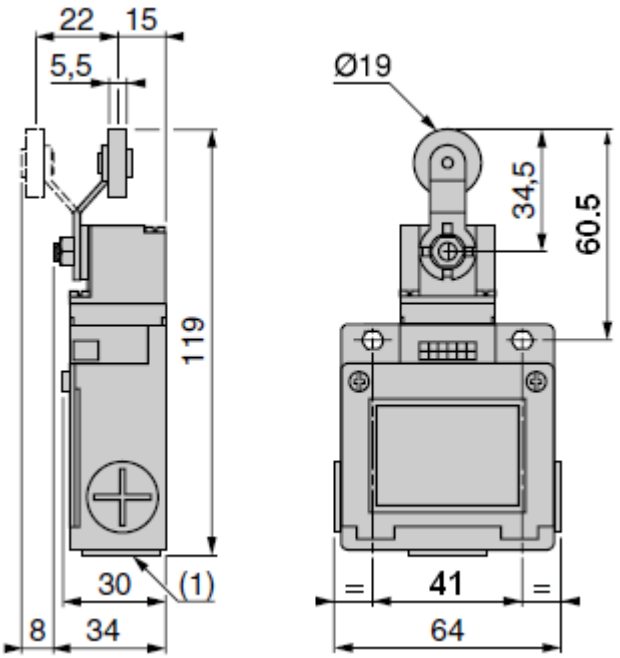

Bipolar sensor O + C
(XE2S P2151)

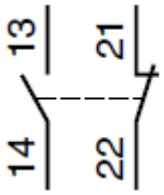

STANDARDS :

- Fabrication according to ISO 9001 : 2008
- DIRECTIVE 97/23/CE : Risk category I Module A
- Certificate 3.1 on request
- Pressure test according to ISO 5208, Range A
- Between flanges PN10 according to EN 1092-1 PN10

ADVICE : Our opinion and our advice are not guaranteed and SFERACO shall not be liable for the consequences of damages.
The customer must check the right choice of the products with the real service conditions.

Sferaco 90 rue du Ruisseau 38297 St Quentin Fallavier Tel: + 33 (0) 474.94.15.90 Fax: + 33 (0) 474.95.62.08 Internet: www.sferaco.fr E-mail : sferaco@sferaco.fr

Information provided as an indication and subject to possible modification

KNIFE GATE VALVE PN10 S-GATE

INSTALLATION INSTRUCTIONS :

GENERAL GUIDELINES :

- Ensure that the valves to be used are appropriate for the conditions of the installation (type of fluid,pressure and temperature).
- Be sure to have enough valves to be able to isolate the sections of piping as well as the appropriate equipment for maintenance and repair.
- Ensure that the valves to be installed are of correct strenght to be able to support the capacity of their usage.
- **Installation of all circuits should ensure that their function can be automatically tested on a regular basis (at least two times a year).**

INSTALLATION INSTRUCTIONS :

- **Before installing the valves,clean and remove any objects from the pipes** (in particular bits of sealing and metal) which could obstruct and block the valves.
- **Ensure that both connecting pipes either side of the valve (upstream and downstream) are aligned (if they're not,the valves may not work correctly).**
- **Make sure that the two sections of the pipe (upstream and downstream) match,the valve unit will not absorb any gaps.Any distortions in the pipes may affect the thightness of the connection,the working of the valve and can even cause a rupture.**To be sure,place the kit in position to ensure the assembling will work.
- **If sections of piping do not have their final support in place,they should be temporarily fixed.This is to avoid unnecessary strain on the valve.**
- During installation operation , do not carry the valves by the handwheel.
- Valves can be installed in all positions but we recommend the above positions :

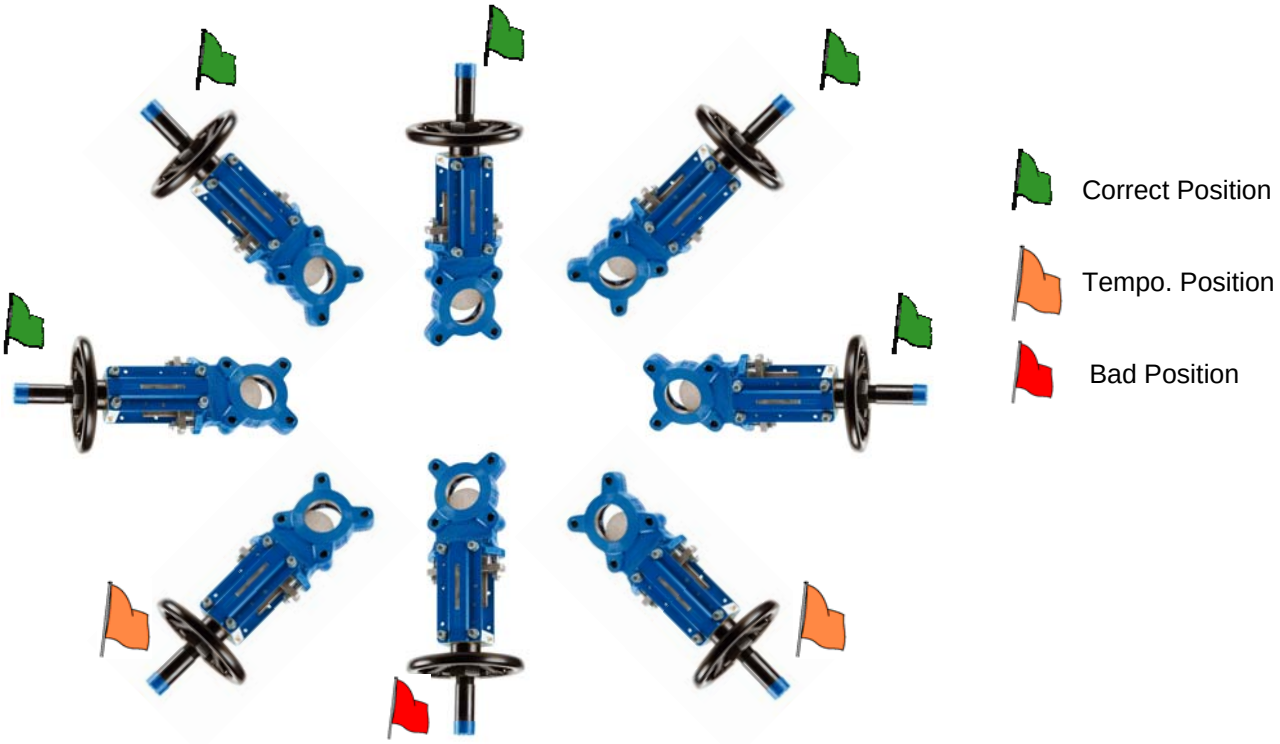

Information provided as an indication and subject to possible modification

KNIFE GATE VALVE PN10 S-GATE

INSTALLATION INSTRUCTIONS (SUITE) :

- If the valve is installed at the end of the pipe, it must be between 2 flanges.
- The knife gate valves are unidirectional, respect the flow direction indicated on the body by the arrow. When using powders, inverse flow direction
- Tighten the bolts in cross. For blind holes, use studs to have a good tightening and tighten them carrefully so that they don't touch the gate.
- During cleaning operation, the valves must be opened.
- Tests must be done with cleaned installation and pipe.
- Test must be done with partially opened valve. Test pressure must not exceed valve specification according to ISO 5208.
- Open carrefully the valve.
- Tighten the gland packing at the first start of the installation (with a moderate torque) so that there's no leakage and the handwheel is easy to operate. Make sure there's no contact between the gate and the gland.
- Keep greased the stem.
- It's recommended to operate the valve (open and close) 1 time per month

Sferaco 90 rue du Ruisseau 38297 St Quentin Fallavier Tel: + 33 (0) 474.94.15.90 Fax: + 33 (0) 474.95.62.08 Internet: www.sferaco.fr E-mail : sferaco@sferaco.fr

Information provided as an indication and subject to possible modification