Free of maintenance stop valve - soft sealed (to 120°C)

EURO-WEDI®

ARI-EURO-WEDI® - Straight through with flanges

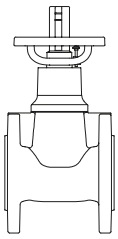

Grey cast iron

Fig. 070 Page 2

ARI-EURO-WEDI® - Straight through with flanges

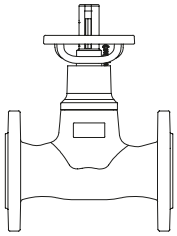

Grey cast iron

Fig. 071 Page 2

ARI-EURO-WEDI® - Hood valve Straight through with flanges

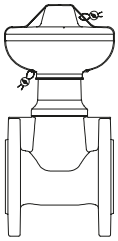

Grey cast iron

Fig. 072 Page 3

ARI-EURO-WEDI® - Hood valve Straight through with flanges

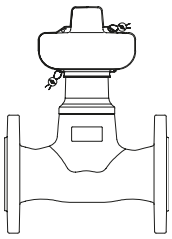

Grey cast iron

Fig. 073 Page 3

ARI-EURO-WEDI® - Straight through with screwed socket connection

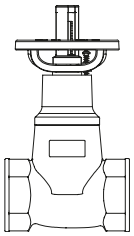

Grey cast iron

Fig. 076 Page 4

ARI-EURO-WEDI® - Hood valve Straight through with screwed socket connection

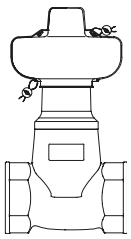

Grey cast iron

Fig. 078 Page 5

Fig. 070

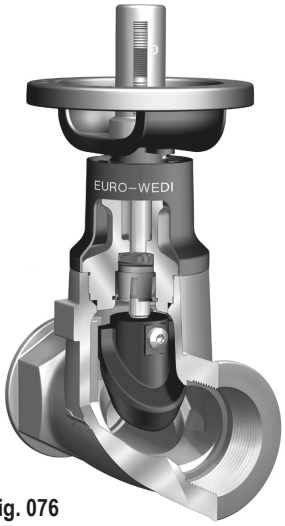

Fig. 076

Features:

- Maintenance-free
- Soft sealing
- Good flow characteristic due to excellent Zeta-values
- Position indicator as standard
- Plug with throttling function
- Travel limiter and locking device (DN15-150 standard, DN200 optional)
- Non-rising handwheel
- Non-rotation lock for all nominal diameters
- External stem thread
- Double sealing mechanism
- Free of PCB
- Insulating cap with integrated dew point barrier
- Complete insulation possible according to the german „Energy saving order - EnEV“

DN200:

- Self-aligning stem bearing
- EDD- Special stem seal

Stop valve - straight through with flanges and soft seal - Face-to-face length FTF-14 and FTF-1 (Grey cast iron)

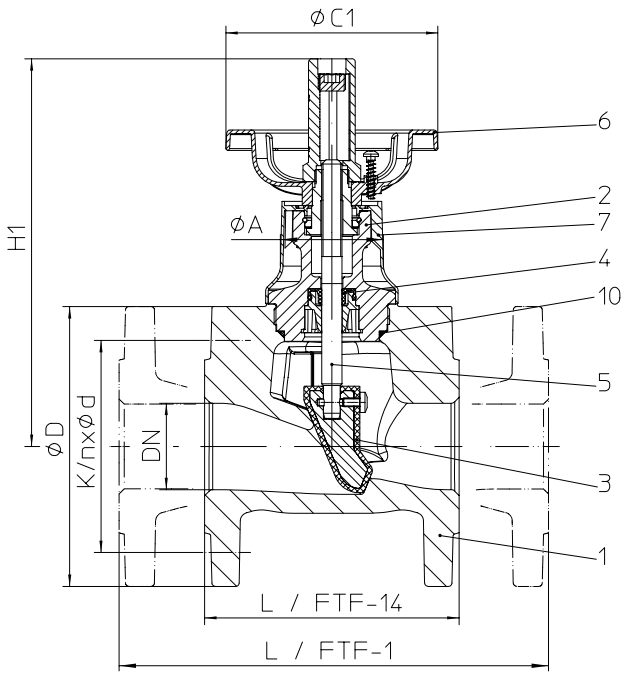

Figure	Nominal pressure	Material	Nominal diameter	Face-to-face dimension
10.070	PN 6	EN-JL1040	DN15-200	FTF-14
12.070	PN 16	EN-JL1040	DN15-200	FTF-14
10.071	PN 6	EN-JL1040	DN15-200	FTF-1
12.071	PN 16	EN-JL1040	DN15-200	FTF-1

EPDM-plug; unsuitable for media containing mineral oil !

Operating temperature: -10°C to +120°C (for a short time up to +130°C)
(for max. permissible ΔP in throttling function, refer to annex: Flow diagram)

DN200:
EDD- Special stem seal

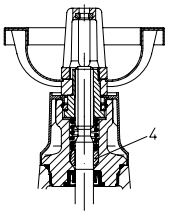

Parts			
Pos.	**Sp.p.**	**Description**	**Fig. 10.070 / 12.070 / 10.071 / 12.071**
1		Body	EN-JL1040, EN-GJL-250
2		Bonnet	EN-JL1040, EN-GJL-250
3	x	Plug	EN-JL1040, EN-GJL-250 / EPDM
4		Sealing ring	EPDM 70
5		Stem	X20Cr13+QT, 1.4021+QT
6		Handwheel	DN15-100: PA 6; DN125-150: DC01, 1.0330 (epoxy-coating); DN200: EN-GJS-400-15, EN-JS1030 (epoxy-coating)
7		Insulating cap	PA 6.6 (eroded acc. to VDI 3400/39)
10	x	O-ring	EPDM 70
	└ Spare parts		

DN		15	20	25	32	40	50	65	80	100	125	150	200
Face-to-face dimension FTF series 14 acc. to DIN EN 558													Standard-flange dimensions refer to page 6
L / FTF-14 (10./12.070)	(mm)	115	120	125	130	140	150	170	180	190	200	210	230
L / FTF-1 (10./12.071)	(mm)	130	150	160	180	200	230	290	310	350	400	480	600
Dimensions													
H1	(mm)	190	190	190	190	230	230	260	310	320	390	470	630
ØA	(mm)	42	42	42	42	60	60	60	87	87	87	87	87
ØC1 (10.070: FTF-14 / PN 6)	(mm)	80	80	80	80	125	125	125	140	140	180	210	210
ØC1 (12.070: FTF-14 / PN 16)	(mm)	80	80	80	80	125	125	125	140	140	180	210	400
ØC1 (10.071: FTF-1 / PN 6)	(mm)	80	80	80	80	125	125	125	140	140	140	210	210
ØC1 (12.071: FTF-1 / PN 16)	(mm)	80	80	80	80	125	125	125	140	140	140	210	400
Travel	(mm)	20	23	23	23	28	35	40	58	58	70	90	125
Kvs-value (10./12.070: FTF-14)	(m^3/h)	9,1	17,4	31,8	32,7	81	84	155	231	312	583	743	1518
Kvs-value (10./12.071: FTF-1)	(m^3/h)	8,4	18,6	32	29,4	78	83	151	216	308	532	878	1533
Zeta-value (10./12.070: FTF-14)	--	1,0	0,8	0,6	1,6	0,6	1,4	1,2	1,2	1,6	1,2	1,5	1,1
Zeta-value (10./12.071: FTF-1)	--	1,2	0,8	0,6	1,6	0,7	1,5	1,3	1,4	1,7	1,4	1,0	1,1
Zeta-value ... range of tolerance for Kvs-values acc. to VDI/VDE 2173													
Handwheel-diameter ≥ DN 80 at Δp ≥ 10 bar, look at ARI-TL 0060000065.													
Weights													
10.070	(kg)	2,5	3,3	3,6	4,3	6,6	7	10,2	14,9	21	29	33,2	65
12.070	(kg)	3,4	3,8	4,3	5,4	7,6	9,1	12,8	16,5	24,5	28,6	38,3	74
10.071	(kg)	3	3,4	4,6	4,7	7	8,3	12,1	16	25	31	43	95
12.071	(kg)	3,5	3,9	4,5	5,6	8	9,8	13	18,3	28,6	34,8	48,8	105

Information / restriction of technical rules need to be observed!

Operating and installation instructions can be downloaded at www.ari-armaturen.com.

ARI-Valves of EN-JL1040 are not allowed to be operated in systems acc. to TRD 110.

The engineer, designing a system or a plant, is responsible for the selection of the correct valve.

Resistance and fitness must be verified (contact manufacturer for information, refer to Product overview and Resistance list).

Stop valve - straight through with flanges and soft seal - as hood valve - Face-to-face length FTF-14 and FTF-1 (Grey cast iron)

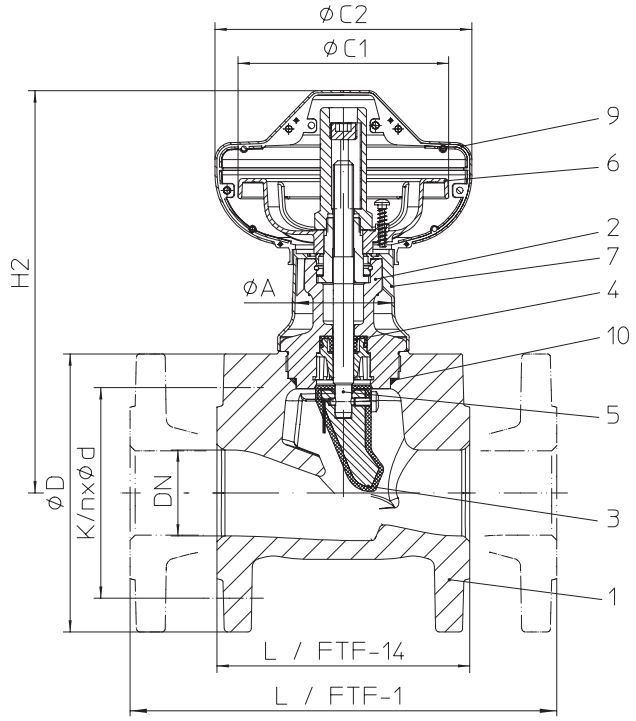

Figure	Nominal pressure	Material	Nominal diameter	Face-to-face dimension
10.072	PN 6	EN-JL1040	DN15-200	FTF-14
12.072	PN 16	EN-JL1040	DN15-200	FTF-14
10.073	PN 6	EN-JL1040	DN15-200	FTF-1
12.073	PN 16	EN-JL1040	DN15-200	FTF-1

EURO-WEDI-hood valve for protection of unauthorized closure according to DIN EN 12828.

Handwheel-ø from DN125 reduced.

EPDM-plug; unsuitable for media containing mineral oil !

Operating temperature: -10°C to +120°C (for a short time up to +130°C)
(for max. permissible ΔP in throttling function, refer to annex: Flow diagram)

DN200:
EDD- Special stem seal

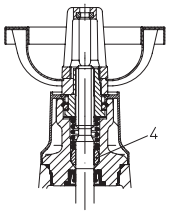

Parts			
Pos.	**Sp.p.**	**Description**	**Fig. 10.072 / 12.072 / 10.073 / 12.073**
1		Body	EN-JL1040, EN-GJL-250
2		Bonnet	EN-JL1040, EN-GJL-250
3	x	Plug *	EN-JL1040, EN-GJL-250 / EPDM
4		Sealing ring	EPDM 70
5		Stem	X20Cr13+QT, 1.4021+QT
6		Handwheel	DN15-100: PA 6; DN125-150: DC01, 1.0330 (epoxy-coating); DN200: EN-GJS-400-15, EN-JS1030 (epoxy-coating)
7		Insulating cap	PA 6.6 (eroded acc. to VDI 3400/39)
9		Guard cap	PP
10	x	O-ring *	EPDM 70
	└ Spare parts		

DN		15	20	25	32	40	50	65	80	100	125	150	200
Face-to-face dimension FTF series 14 acc. to DIN EN 558													Standard-flange dimensions refer to page 6
L / FTF-14 (10./12.072)	(mm)	115	120	125	130	140	150	170	180	190	200	210	230
L / FTF-1 (10./12.073)	(mm)	130	150	160	180	200	230	290	310	350	400	480	600
Dimensions													
H2	(mm)	200	200	200	200	240	240	270	320	330	400	480	630
ØA	(mm)	42	42	42	42	60	60	60	87	87	87	87	87
ØC1	(mm)	80	80	80	80	125	125	125	140	140	180	210	180
ØC2	(mm)	91	91	91	91	135	135	135	154	154	224	224	190
Travel	(mm)	20	23	23	23	28	35	40	58	58	70	90	125
Kvs-value (10./12.072: FTF-14)	(m^3/h)	9,1	17,4	31,8	32,7	81	84	155	231	312	583	743	1518
Kvs-value (10./12.073: FTF-1)	(m^3/h)	8,4	18,6	32	29,4	78	83	151	216	308	532	878	1533
Zeta-value (10./12.072: FTF-14)	--	1,0	0,8	0,6	1,6	0,6	1,4	1,2	1,2	1,6	1,2	1,5	1,1
Zeta-value (10./12.073: FTF-1)	--	1,2	0,8	0,6	1,6	0,7	1,5	1,3	1,4	1,7	1,4	1,0	1,1
Zeta-value ... range of tolerance for Kvs-values acc. to VDI/VDE 2173													
Weights													
10.072	(kg)	2,5	3,3	3,6	4,3	6,6	7	10,2	14,9	21	29	33,2	65
12.072	(kg)	3,4	3,8	4,3	5,4	7,6	9,1	12,8	16,5	24,5	28,6	38,3	74
10.073	(kg)	3	3,4	4,6	4,7	7	8,3	12,1	16	25	31	43	95
12.073	(kg)	3,5	3,9	4,5	5,6	8	9,8	13	18,3	28,6	34,8	48,8	105

Information / restriction of technical rules need to be observed!
Operating and installation instructions can be downloaded at www.ari-armaturen.com.
ARI-Valves of EN-JL1040 are not allowed to be operated in systems acc. to TRD 110.
The engineer, designing a system or a plant, is responsible for the selection of the correct valve.
Resistance and fitness must be verified (contact manufacturer for information, refer to Product overview and Resistance list).

Stop valve - straight through with screwed socket connection and soft seal - Face-to-face length FTF-14 (Grey cast iron)

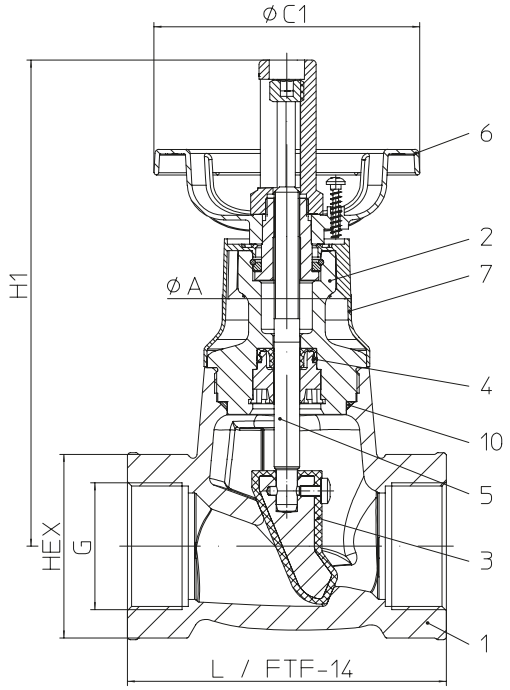

Figure	Nominal pressure	Material	Nominal diameter	Face-to-face dimension
12.076	PN16	EN-JL1040	DN15-50 G 1/2" - 2"	FTF-14

EPDM-plug; unsuitable for media containing mineral oil !

Operating temperature: -10°C to +120°C (for a short time up to +130°C)
(for max. permissible ΔP in throttling function, refer to annex: Flow diagram)

Parts			
Pos.	**Sp.p.**	**Description**	**Fig. 12.076**
1		Body	EN-JL1040, EN-GJL-250
2		Bonnet	EN-JL1040, EN-GJL-250
3	x	Plug	EN-JL1040, EN-GJL-250 / EPDM
4		Sealing ring	EPDM 70
5		Stem	X20Cr13+QT, 1.4021+QT
6		Handwheel	PA 6
7		Insulating cap	PA 6.6 (eroded acc. to VDI 3400/39)
10	x	O-ring	EPDM 70
	└ Spare parts		

DN		**15**	**20**	**25**	**32**	**40**	**50**
NPS		**1/2"**	**3/4"**	**1"**	**1 1/4"**	**1 1/2"**	**2"**
Face-to-face dimension FTF series 14 acc. to DIN EN 558							Screwed sockets according to DIN ISO 228-1
L	(mm)	115	120	125	130	140	150
Dimensions							
G	(inch)	1/2	3/4	1	1 1/4	1 1/2	2
H1	(mm)	190	190	190	190	230	230
HEX	(mm)	32 (hex.)	41 (hex.)	46 (hex.)	55 (oct.)	65 (oct.)	75 (oct.)
ØA	(mm)	42	42	42	42	60	60
ØC1	(mm)	80	80	80	80	125	125
Travel	(mm)	20	23	23	23	28	35
Kvs-value	(m^3/h)	9,1	17,4	31,8	32,7	81	84
Zeta-value	--	1,0	0,8	0,6	1,6	0,6	1,4
Zeta-value ... range of tolerance for Kvs-values acc. to VDI/VDE 2173							
Weights							
12.076	(kg)	1,9	2,1	2,2	2,5	4,1	4,8

Information / restriction of technical rules need to be observed!
Operating and installation instructions can be downloaded at www.ari-armaturen.com.
ARI-Valves of EN-JL1040 are not allowed to be operated in systems acc. to TRD 110.
The engineer, designing a system or a plant, is responsible for the selection of the correct valve.
Resistance and fitness must be verified (contact manufacturer for information, refer to Product overview and Resistance list).

Stop valve - straight through with screwed socket connection and soft seal - as hood valve - Face-to-face length FTF-14 (Grey cast iron)

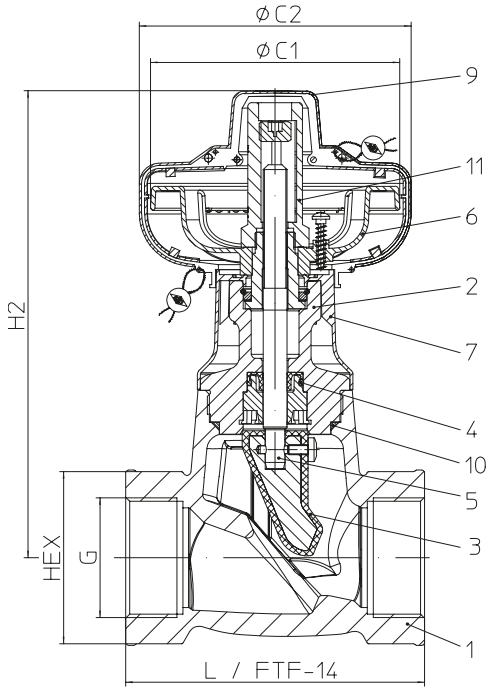

Figure	Nominal pressure	Material	Nominal diameter	Face-to-face dimension
12.078	PN16	EN-JL1040	DN15-50 G 1/2" - 2"	FTF-14

EURO-WEDI-hood valve for protection of unauthorized closure according to DIN EN 12828.

EPDM-plug; unsuitable for media containing mineral oil !

Operating temperature: -10°C to +120°C (for a short time up to +130°C)
(for max. permissible ΔP in throttling function, refer to annex: Flow diagram)

Parts			
Pos.	**Sp.p.**	**Description**	**Fig. 12.078**
1		Body	EN-JL1040, EN-GJL-250
2		Bonnet	EN-JL1040, EN-GJL-250
3	x	Plug	EN-JL1040, EN-GJL-250 / EPDM
4		Sealing ring	EPDM 70
5		Stem	X20Cr13+QT, 1.4021+QT
6		Handwheel	PA 6
7		Insulating cap	PA 6.6 (eroded acc. to VDI 3400/39)
9		Guard cap	PP
10	x	O-ring	EPDM 70
	└ Spare parts		

DN		**15**	**20**	**25**	**32**	**40**	**50**
NPS		**1/2"**	**3/4"**	**1"**	**1 1/4"**	**1 1/2"**	**2"**
Face-to-face dimension FTF series 14 acc. to DIN EN 558							Screwed sockets according to DIN ISO 228-1
L	(mm)	115	120	125	130	140	150
Dimensions							
G	(inch)	1/2	3/4	1	1 1/4	1 1/2	2
H2	(mm)	200	200	200	200	240	240
HEX	(mm)	32 (hex.)	41 (hex.)	46 (hex.)	55 (oct.)	65 (oct.)	75 (oct.)
ØA	(mm)	42	42	42	42	60	60
ØC1	(mm)	80	80	80	80	125	125
ØC2	(mm)	91	91	91	91	135	135
Travel	(mm)	20	23	23	23	28	35
Kvs-value	(m^3/h)	9,1	17,4	31,8	32,7	81	84
Zeta-value	--	1,0	0,8	0,6	1,6	0,6	1,4
Zeta-value ... range of tolerance for Kvs-values acc. to VDI/VDE 2173							
Weights							
12.078	(kg)	1,9	2,1	2,2	2,5	4,1	4,8

Information / restriction of technical rules need to be observed!
Operating and installation instructions can be downloaded at www.ari-armaturen.com.
ARI-Valves of EN-JL1040 are not allowed to be operated in systems acc. to TRD 110.
The engineer, designing a system or a plant, is responsible for the selection of the correct valve.
Resistance and fitness must be verified (contact manufacturer for information, refer to Product overview and Resistance list).

DN			15	20	25	32	40	50	65	80	100	125	150	200

Standard-flange dimensions acc. to DIN EN 1092-1/-2														(Flange holes / -thickness tolerances acc. to DIN 2531/2533)
PN6	ØD	(mm)	80	90	100	120	130	140	160	190	210	240	265	320
	ØK	(mm)	55	65	75	90	100	110	130	150	170	200	225	280
	n x Ød	(mm)	4x11	4x11	4x11	4x14	4x14	4x14	4x14	4x18	4x18	8x18	8x18	8x18
PN16	ØD	(mm)	95	105	115	140	150	165	185	200	220	250	285	340
	ØK	(mm)	65	75	85	100	110	125	145	160	180	210	240	295
	n x Ød	(mm)	4x14	4x14	4x14	4x18	4x18	4x18	4x18	8x18	8x18	8x18	8x22	12x22

Pressure-temperature-ratings	Intermediate values for max. permissible operational pressures can be determined by linear interpolation of the given temperature / pressure chart.

acc. to DIN EN 1092-2			-10°C to 120°C	120°C	130°C
EN-JL1040	6	(bar)	6	6	5,8
EN-JL1040	16	(bar)	16	16	15,5

Travel limiter and locking device

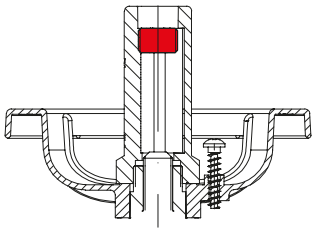

DN 15-150 (standard)

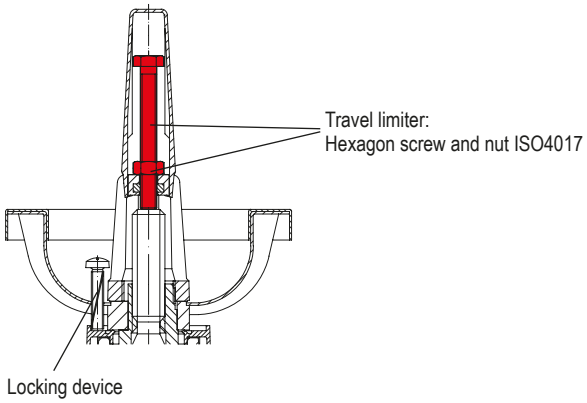

DN200 (optional)

Travel limiter	M10 x 170
Locking device	Thread cutting screw DIN 7516 M6 x 30

Please indicate when ordering

- Figure-No.
- Nominal pressure
- Nominal diameter

Example:

Figure 12.070, FTF-14, Nominal pressure PN16, Nominal diameter DN100

Please indicate in your order, if the valves are to be installed in hazardous areas (ATEX)

ARMATUREN
Technology for the Future.
GERMAN QUALITY VALVES
ARI-Armaturen Albert Richter GmbH & Co. KG, D-33750 Schloß Holte-Stukenbrock,
Tel. +49 52 07 / 994-0, Telefax +49 52 07 / 994-158 or 159 Internet: http://www.ari-armaturen.com E-mail: info.vertrieb@ari-armaturen.com