With pneumatic and electric actuators

ARI-STEVI® 440 / 441

Pneumatic actuator
ARI-DP 32-34 Tri

- Reversible pneumatic actuator
- Actuator with rolling diaphragm
- Air supply pressure max. 6 bar
- Stem protection by bellow
- Maintenance-free O-ring sealing
- Assembly of additional devices acc. to DIN IEC 60534-6

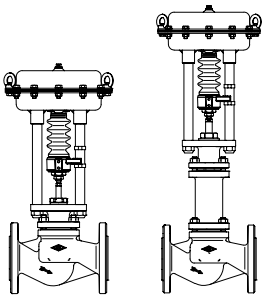

Page 4

ARI-STEVI® 440 / 441

Electric actuator
ARI-PREMIO 2,2-15kN
ARI-PREMIO-Plus 2G 2,2-15kN

- Enclosure IP 65
- 2 torque switches
- Handwheel
- Additional devices available, e.g. potentiometer

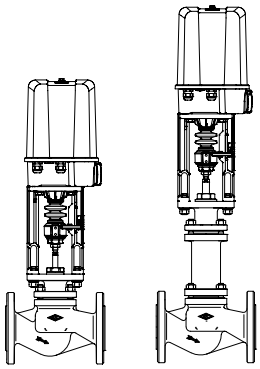

Page 12

ARI-STEVI® 440 / 441

Electric actuator
AUMA SAR 07.2-10.2

- Enclosure IP 67
- 2 torque switches
- 2 travel switches
- Handwheel
- Overheating protection for motor as standard
- Additional devices available, e.g. potentiometer
- Explosion proof version available

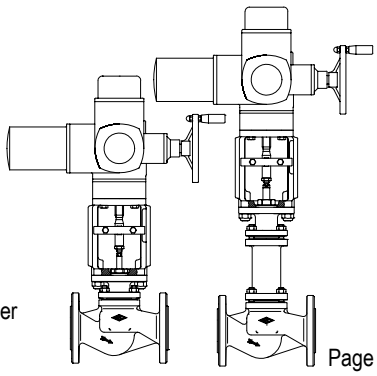

Page 14

ARI-STEVI® 440

Electric actuator with fail-safe function
FR1.2

- Operation mode for fail-safe function CLOSE
- Enclosure IP 66
- Operating time adjustable
- Additional devices available, e.g. potentiometer

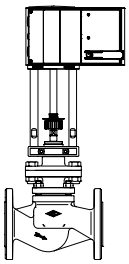

Page 16

ARI-STEVI® 440 / 441

Electric actuator with fail-safe function
FR2.1-2.2

- Fig. 440/441 with FR 2.1-2.2, actuator type approved acc. to DIN EN 14597
- Optional direction for safety reset, OPEN or CLOSE, as required
- Enclosure IP 54
- 1 travel switch for OPEN and CLOSE
- Additional devices available, e.g. potentiometer

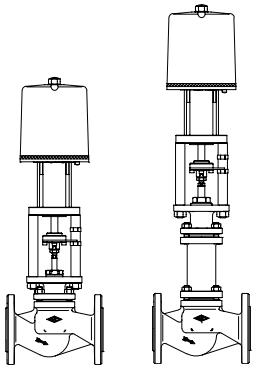

Page 18

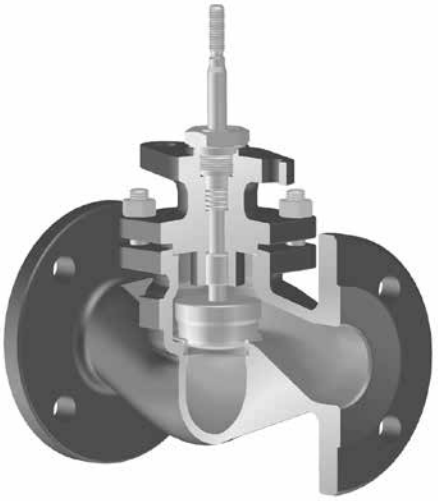

Fig. 440

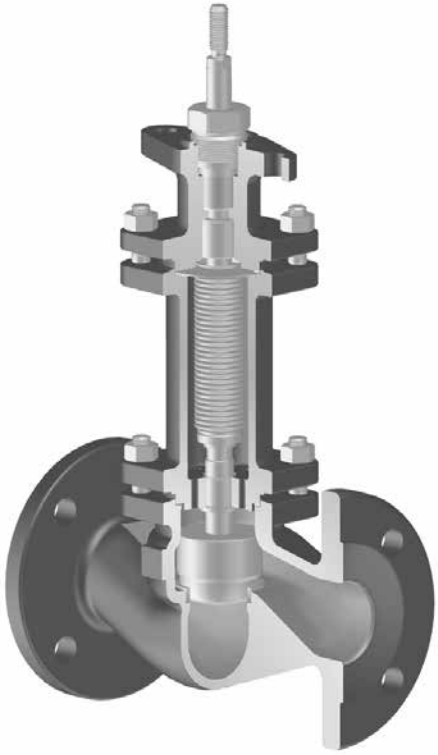

Fig. 441

Figure	Nominal pressure	Material	Nominal diameter
12.440 / 12.441	PN16	EN-JL1040	DN15-250
22.440 / 22.441	PN16	EN-JS1049	DN15-250
23.440 / 23.441	PN25	EN-JS1049	DN15-150
34.440 / 34.441	PN25	1.0619+N	DN15-250
35.440 / 35.441	PN40	1.0619+N	DN15-250
54.440 / 54.441	PN25	1.4408	DN15-250
55.440 / 55.441	PN40	1.4408	DN15-150
Other materials and versions on request.			

Information / restriction of technical rules need to be observed!

ARI-Valves of EN-JL1040 are not allowed to be operated in systems acc. to TRD 110.

A production permission acc. to TRB 801 No. 45 is available.
(acc. to TRB 801 No. 45 EN-JL1040 is not allowed.)

The engineer, designing a system or a plant, is responsible for the selection of the correct valve.

Resistance and fitness must be verified, contact manufacturer for information (refer to Product overview and Resistance list).

Stem sealing

Fig. 440	standard		optional	
	DN15-150	DN200-250	DN15-250	DN15-250
	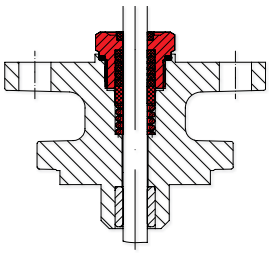	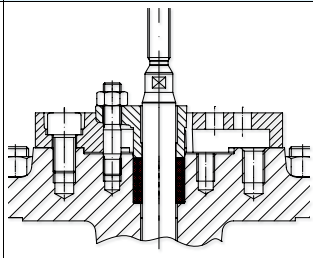	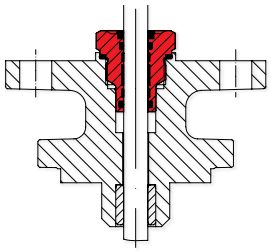	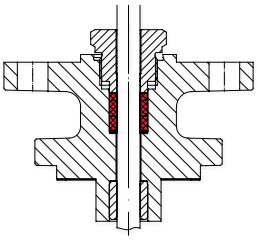
	I. PTFE-V-ring unit -10°C to 220°C	II. PTFE-packing -10°C to 250°C	I. EPDM-sealing -10°C to 150°C (allowed for water and steam up to 180°C)	II. PTFE-packing -10°C to 250°C II. Pure graphite-packing -10°C to 450°C

Fig. 441	standard	optional	
	DN15-250	DN15-100	DN125-150
	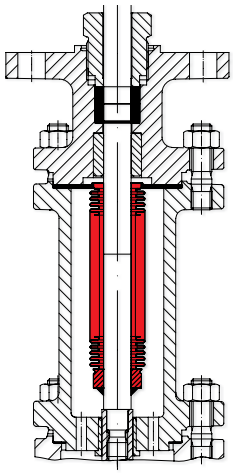	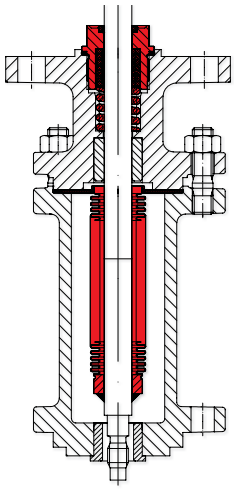	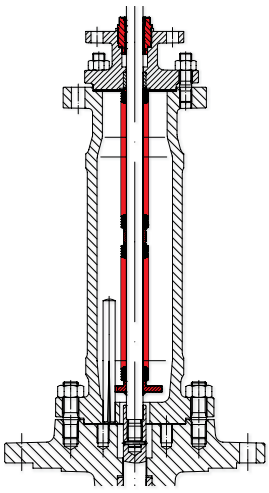
	III. Stainless steel-bellow with pure graphite-packing -60°C to 450°C	III. Stainless steel-bellow with V-ring unit -60°C to 220°C	III. Stainless steel bellows seal with EPDM-sealing -60°C to 150°C (allowed for water and steam up to 180°C)

Pressure-temperature-ratings

Intermediate values for max. permissible operational pressures can be determined by linear interpolation of the given temperature / pressure chart.

acc. to DIN EN 1092-2			-60°C to <-10°C [1]	-10°C to 120°C	150°C	200°C	250°C	300°C	350°C	400°C	450°C
EN-JL1040	PN16	(bar)	--	16	14,4	12,8	11,2	9,6	--	--	--
EN-JS1049	PN16	(bar)	on request	16	15,5	14,7	13,9	12,8	11,2	--	--
EN-JS1049	PN25	(bar)	on request	25	24,3	23	21,8	20	17,5	--	--

acc. to manufacturers standard			-60°C to <-10°C [1]	-10°C to 120°C	150°C	200°C	250°C	300°C	350°C	400°C	450°C
1.0619+N	PN25	(bar)	18,7	25	23,9	22	20	17,2	16	14,8	8,2
1.0619+N	PN40	(bar)	30	40	38,1	35	32	28	25,7	23,8	13,1

acc. to DIN EN 1092-1			-60°C to <-10°C [1]	-10°C to 100°C	150°C	200°C	250°C	300°C	350°C	400°C	450°C
1.4408	PN40	(bar)	40	40	36,3	33,7	31,8	29,7	28,5	27,4	--

[1] Valve with extended bonnet, studs and nuts made of A4-70 (at temperatures below -10°C)

Plug design standard			Guiding	Rangeability
DN15-150: **Parabolic plug,** **metal seat**	- Leakage class IV acc. to DIN EN 60534-4 - Flow characteristic: - equal percentage (glp) (from Kvs 100 modified) - linear (lin)	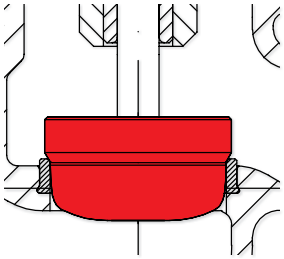	Stem	50 : 1
DN200-250: **V-port plug,** **metal seat**	- Leakage class IV acc. to DIN EN 60534-4 - from Kvs 63 - Flow characteristic: - equal percentage (glp) (from Kvs 100 modified) - linear (lin)	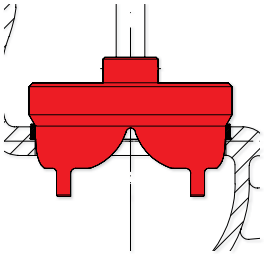	Stem / Seat ring	30 : 1
Plug design optional			**Guiding**	**Rangeability**
DN15-150: **Parabolic plug,** **tight closure**	- Leakage class IV-S1 acc. to DIN EN 60534-4 (special actuator forces necessary, refer to seperate data sheet) - Flow characteristic: - equal percentage (glp) (from Kvs 100 modified) - linear (lin)	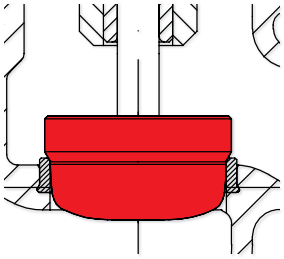	Stem	50 : 1
DN15-150: **Parabolic plug** **with PTFE-Soft seal** (max. 200°C)	- Leakage class VI acc. to DIN EN 60534-4 - Flow characteristic: - equal percentage (glp) (from Kvs 100 modified) - linear (lin)	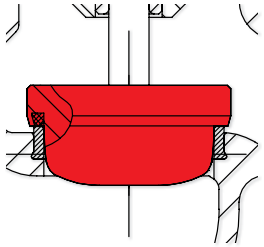	Stem	50 : 1
DN15-150: **Parabolic plug** **with Pressure balanced plug** **metal seat** Piston seal: PTFE with stainless steel spring (max. 200°C)	- Leakage class IV acc. to DIN EN 60534-4 - from Kvs 6,3 - Flow characteristic: - equal percentage (glp) (from Kvs 100 modified) - linear (lin)	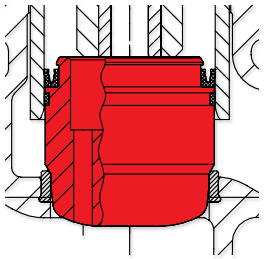	Stem	50 : 1
DN65-150: **V-port plug** **metal seat**	- Leakage class IV acc. to DIN EN 60534-4 - from Kvs 63 - Flow characteristic: - equal percentage (glp) (from Kvs 100 modified) - linear (lin)	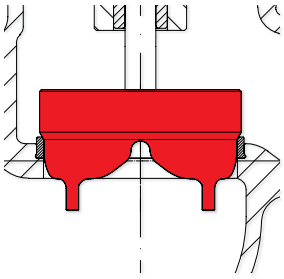	Stem / Seat ring	30 : 1

Control valve in straightway form with pneumatic actuator ARI-DP

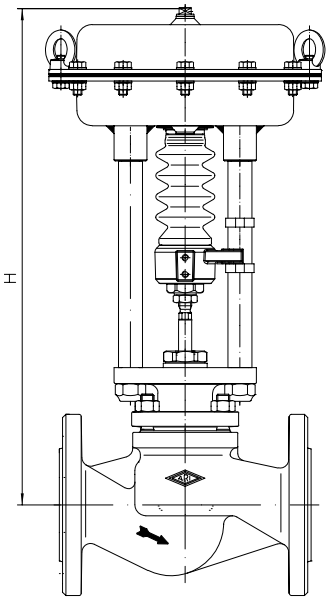

Fig. 440

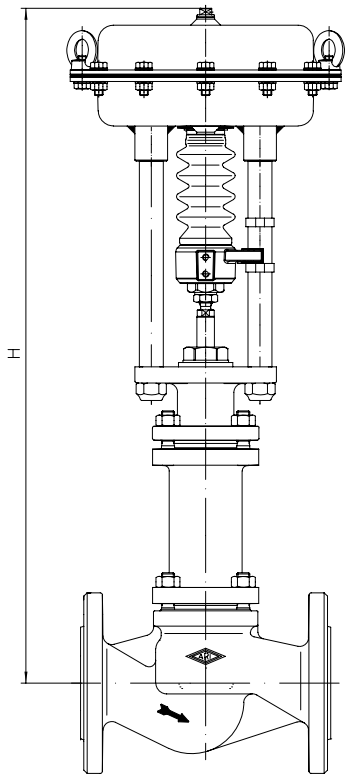

Fig. 441

Heights and weights

DN				15	20	25	32	40	50	65	80	100	125	150	200	250
Fig. 440	**DP32**	H	(mm)	442	442	450	450	457	463	465	480	499	--	--	--	--
		PN16	(kg)	13	13	14	16	18	21	26	31	42	--	--	--	--
		PN40	(kg)	13	14	15	17	19	22	29	35	48	--	--	--	--
	DP33	H	(mm)	497	497	505	505	512	518	531	546	565	--	--	--	--
		PN16	(kg)	19	19	20	22	24	27	32	37	48	--	--	--	--
		PN40	(kg)	19	20	21	23	25	28	35	41	54	--	--	--	--
	DP34	H	(mm)	--	--	--	--	--	--	666	681	680	719	779	841	901
		PN16	(kg)	--	--	--	--	--	--	62	67	78	95	118	190	304
		PN40	(kg)	--	--	--	--	--	--	65	71	84	101	122	222	336
	DP34T	H	(mm)	--	--	--	--	--	--	--	--	--	--	--	1091	1151
		PN16	(kg)	--	--	--	--	--	--	--	--	--	--	--	261	375
		PN40	(kg)	--	--	--	--	--	--	--	--	--	--	--	293	407
	DP34Tri	H	(mm)	--	--	--	--	--	--	--	--	--	--	--	1313	1373
		PN16	(kg)	--	--	--	--	--	--	--	--	--	--	--	295	409
		PN40	(kg)	--	--	--	--	--	--	--	--	--	--	--	327	441
Fig. 441	**DP32**	H	(mm)	627	627	635	635	626	628	701	713	729	--	--	--	--
		PN16	(kg)	17	17	18	21	23	26	29	40	55	--	--	--	--
		PN40	(kg)	19	21	23	26	32	35	42	52	68	--	--	--	--
	DP33	H	(mm)	682	682	690	690	681	683	767	779	795	--	--	--	--
		PN16	(kg)	23	23	24	27	29	32	35	46	61	--	--	--	--
		PN40	(kg)	25	27	29	32	38	41	48	58	74	--	--	--	--
	DP34	H	(mm)	--	--	--	--	--	--	902	914	930	1074	1105	1363	1427
		PN16	(kg)	--	--	--	--	--	--	65	76	91	111	132	212	326
		PN40	(kg)	--	--	--	--	--	--	78	88	104	121	138	247	362
	DP34T	H	(mm)	--	--	--	--	--	--	--	--	--	--	--	1542	1601
		PN16	(kg)	--	--	--	--	--	--	--	--	--	--	--	283	397
		PN40	(kg)	--	--	--	--	--	--	--	--	--	--	--	318	433
	DP34Tri	H	(mm)	--	--	--	--	--	--	--	--	--	--	--	1764	1823
		PN16	(kg)	--	--	--	--	--	--	--	--	--	--	--	317	431
		PN40	(kg)	--	--	--	--	--	--	--	--	--	--	--	352	467

Other dimensions refer to pages 20-21.

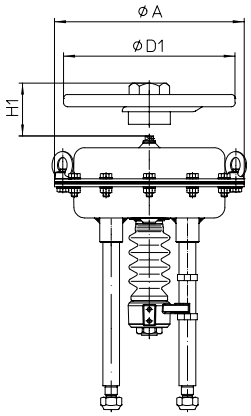

DP32 / DP33 / DP34

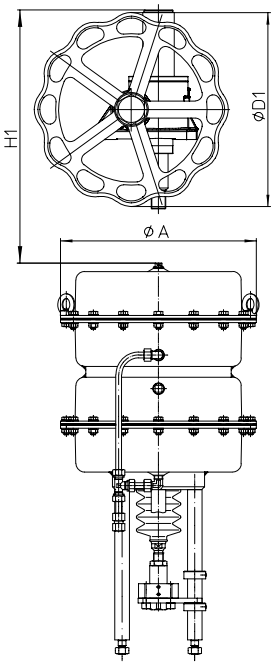

DP34T

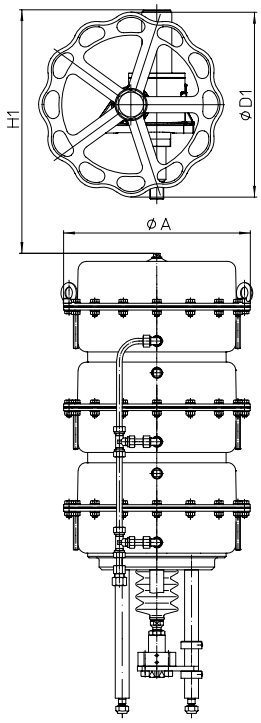

DP34Tri

Actuator data			DP32	DP33	DP34	DP34T	DP34Tri
Ø A		(mm)	250	300	405		
Effective diaphragm area		(cm^2)	250	400	800	1600	2400
Top mounted handwheel	Ø D1	(mm)	225	300	400		
	H1	(mm)	270	284	442	635	635
	Weight	(kg)	5		17	41	
Technical data for actuator refer to data sheet ARI-DP.							

max. permissible closing pressures on flow-to-open P2 = 0.
Observe pressure-temperature-limits, refer to page 2.

DN							15	20	25	32	40	50	65	80	100
Parabolic plug	Kvs-value					(m^3/h)	4 2,5	6,3 4 / 2,5	10 6,3	16 10	25 16	40 25	63 40	100 63	160 100
	max. diff. pressure [1]					(bar)	40	40	40	40	30	20	8	4	1,5
V-port plug	Kvs-value					(m^3/h)	--	--	--	--	--	--	63	100	160
	max. diff. pressure [1]					(bar)	--	--	--	--	--	--	30	25	25
Seat-ø						(mm)	21	21	27	31	41	51	66	81	101
Travel						(mm)	20						30		
DP32 250 cm^2 Spring closes on air failure (extended through spring)	Spring range (bar)	0,2-1,0	Air supply pressure min. (bar) [2]	1,2	I.	(bar)	5,5	5,5	2,6	1,6					
					II.	(bar)	2,3	2,3							
					III.	(bar)									
		0,4-1,2		1,4	I.	(bar)	18,6	18,6	10,7	7,8	3,9	2,2			
					II.	(bar)	15,4	15,4	8,7	6,2	3	1,6			
					III.	(bar)	8,6	8,6	7,1	5	1,7				
		0,8-2,4		2,7	I.	(bar)	40	40	26,8	20,1	11	6,8	3,7	2,2	1,2
					II.	(bar)	40	40	24,8	18,6	10,2	6,3	3,2	1,9	1
					III.	(bar)	26,4	26,4	23,2	17,3	8,9	5,4	2,9	1,7	
		1,5-2,9		3,2	I.	(bar)			40	40	23,5	15			
					II.	(bar)			40	40	22,7	14,4			
					III.	(bar)	40	40	40	38,9	21,4	13,6			
		2,0-3,8		4,1	I.	(bar)					32,5	20,8			
					II.	(bar)					31,6	20,2			
					III.	(bar)				40	30,3	19,4			

DN					15	20	25	32	40	50	65	80	100
Parabolic plug	Kvs-value			(m^3/h)	4 2,5	6,3 4 / 2,5	10 6,3	16 10	25 16	40 25	63 40	100 63	160 100
	max. diff. pressure [1]			(bar)	40	40	40	40	30	20	8	4	1,5
V-port plug	Kvs-value			(m^3/h)	--	--	--	--	--	--	63	100	160
	max. diff. pressure [1]			(bar)	--	--	--	--	--	--	30	25	25
Seat-ø				(mm)	21	21	27	31	41	51	66	81	101
Travel				(mm)	20						30		
DP32 250 cm^2 Spring opens on air failure (retracted through spring)	Air supply pressure min. (bar) [2]	1,4	I.	(bar)	18,6	18,6	10,7	7,8	3,9	2,2			
			II.	(bar)	15,4	15,4	8,7	6,2	3	1,6			
			III.	(bar)	8,6	8,6	7,1	5	1,7				
		2	I.	(bar)	40	40	34,9	26,3	14,6	9,2	5	3,1	1,8
			II.	(bar)	40	40	32,9	24,8	13,7	8,6	4,6	2,8	1,6
			III.	(bar)	35,2	35,2	31,3	23,5	12,4	7,7	4,3	2,6	1,5
		3	I.	(bar)			40	40	32,5	20,8	12	7,8	4,8
			II.	(bar)			40	40	31,6	20,2	11,6	7,5	4,6
			III.	(bar)	40	40	40	40	30,3	19,4	11,3	7,3	4,5
		4	I.	(bar)					40	32,4	19	12,4	7,8
			II.	(bar)					40	31,8	18,6	12,1	7,6
			III.	(bar)					40	31	18,3	11,9	7,5
		5	I.	(bar)						40	26	17	10,8
			II.	(bar)						40	25,6	16,7	10,6
			III.	(bar)						40	25,3	16,5	10,5
		6	I.	(bar)							33	21,7	13,8
			II.	(bar)							32,6	21,4	13,6
			III.	(bar)							32,3	21,2	13,5

I. Fig. 440: PTFE-V-ring unit / EPDM-sealing
II. Fig. 440: PTFE- / pure graphite-packing
III. Fig. 441: Bellows seal

[1] max. differential pressure drop

[2] Air supply pressure max. to actuator: 6 bar Restriction: a) 5 bar b) 4,5 bar c) 4 bar d) 3,5 bar e) 3 bar

max. permissible closing pressures on flow-to-open P2 = 0.
Observe pressure-temperature-limits, refer to page 2.

DN							15	20	25	32	40	50	65	80	100
Parabolic plug	Kvs-value					(m^3/h)	4 2,5	6,3 4 / 2,5	10 6,3	16 10	25 16	40 25	63 40	100 63	160 100
	max. diff. pressure [1]					(bar)	40	40	40	40	30	20	8	4	1,5
V-port plug	Kvs-value					(m^3/h)	--	--	--	--	--	--	63	100	160
	max. diff. pressure [1]					(bar)	--	--	--	--	--	--	30	25	25
Seat-ø						(mm)	21	21	27	31	41	51	66	81	101
Travel						(mm)	20						30		
DP33 400 cm^2 Spring closes on air failure (extended through spring)	Spring range (bar)	0,2-1,0	Air supply pressure min. (bar) [2]	1,2	I.	(bar)	13,3 c)	13,3 c)	7,4c)	5,2 c)	2,4 c)	1,2 c)			
					II.	(bar)	10,1 c)	10,1 c)	5,4 c)	3,7 c)	1,5 c)				
					III.	(bar)	5 a)	5 a)	3,8 a)	2,5 a)					
		0,4-1,2		1,4	I.	(bar)	34,2 c)	34,2 c)	20,2 c)	15,1 c)	8,1 c)	4,9 c)	2,5	1,4	
					II.	(bar)	31 c)	31 c)	18,3 c)	13,6 c)	7,3 c)	4,4 c)	2,1	1,1	
					III.	(bar)	19,1 a)	19,1 a)	16,6 a)	12,3 a)	5,9 a)	3,5 a)	1,8 a)		
		0,8-2,4		2,7	I.	(bar)	40 a)	40 a)	40 a)	34,7 a)	19,5 a)	12,3 a)	7	4,4	2,6
					II.	(bar)	40 a)	40 a)	40 a)	33,2 a)	18,6 a)	11,8 a)	6,5	4,1	2,4
					III.	(bar)	40	40	40	31,9	17,3	10,9	6,2	3,9	2,3
		1,5-3,0		3,3	I.	(bar)							14,8	9,6	6
					II.	(bar)							14,3	9,3	5,8
					III.	(bar)							14	9,1	5,7
		1,7-2,7		3,1	I.	(bar)				40 a)	40 a)	29 a)			
					II.	(bar)				40 a)	40 a)	28,4 a)			
					III.	(bar)				40	40	27,6			
		2,0-4,0		4,5	I.	(bar)							20,3	13,3	8,4
					II.	(bar)							19,9	12,9	8,2
					III.	(bar)							19,6	12,8	8,1
		2,3-3,7		4,5	I.	(bar)						40			
					II.	(bar)						39,5			
					III.	(bar)						38,6			

DN						15	20	25	32	40	50	65	80	100
Parabolic plug	Kvs-value				(m^3/h)	4 2,5	6,3 4 / 2,5	10 6,3	16 10	25 16	40 25	63 40	100 63	160 100
	max. diff. pressure [1]				(bar)	40	40	40	40	30	20	8	4	1,5
V-port plug	Kvs-value				(m^3/h)	--	--	--	--	--	--	63	100	160
	max. diff. pressure [1]				(bar)	--	--	--	--	--	--	30	25	25
Seat-ø					(mm)	21	21	27	31	41	51	66	81	101
Travel					(mm)	20						30		
DP33 400 cm^2 Spring opens on air failure (retracted through spring)	Air supply pressure min. (bar) [2]	1,4	I.		(bar)	34,2 d)	34,2 d)	20,2 d)	15,1 d)	8,1 d)	4,9 d)	2,5 d)	1,4 d)	
			II.		(bar)	31 d)	31 d)	18,3 d)	13,6 d)	7,3 d)	4,4 d)	2,1 d)	1,1 d)	
			III.		(bar)	19,1 d)	19,1 d)	16,6 d)	12,3 d)	5,9 d)	3,5 d)	1,8 d)		
		2	I.		(bar)	40 d)	40 d)	40 d)	40 d)	25,2 d)	16 d)	9,2 d)	5,9 d)	3,6 d)
			II.		(bar)	40 d)	40 d)	40 d)	40 d)	24,3 d)	15,5 d)	8,7 d)	5,6 d)	3,4 d)
			III.		(bar)	40 d)	40 d)	40 d)	40 d)	23 d)	14,6 d)	8,4 d)	5,4 d)	3,3 d)
		3	I.		(bar)					40 d)	34,6 d)	20,3 d)	13,3 d)	8,4 d)
			II.		(bar)					40 d)	34 d)	19,9 d)	12,9 d)	8,2 d)
			III.		(bar)					40 d)	33,1 d)	19,6 d)	12,8 d)	8,1 d)
		4	I.		(bar)						40 c)	31,4	20,6	13,1
			II.		(bar)						40 c)	31	20,3	12,9
			III.		(bar)						40 a)	30,7 a)	20,1 a)	12,8 a)
		5	I.		(bar)							40	28	17,9
			II.		(bar)							40	27,7	17,7
			III.		(bar)							40 a)	27,5 a)	17,6 a)
		6	I.		(bar)								35,4	22,7
			II.		(bar)								35,1	22,5

I. Fig. 440: PTFE-V-ring unit / EPDM-sealing
II. Fig. 440: PTFE- / pure graphite-packing
III. Fig. 441: Bellows seal

[1] max. differential pressure drop

[2] Air supply pressure max. to actuator: 6 bar Restriction: a) 5 bar b) 4,5 bar c) 4 bar d) 3,5 bar e) 3 bar

max. permissible closing pressures on flow-to-open P2 = 0.
Observe pressure-temperature-limits, refer to page 2.

DN							65	80	100	125	150	200	250
Parabolic plug	Kvs-value					(m^3/h)	63 40	100 63	160 100	250 160	400 250	--	--
	max. diff. pressure [1]					(bar)	8	4	1,5	1	1	--	--
V-port plug	Kvs-value					(m^3/h)	63	100	160	250	400	630	1000
	max. diff. pressure [1]					(bar)	30	25	25	10	10	5	5
Seat-ø						(mm)	66	81	101	126	151	201	251
Travel						(mm)	30			50		65	
DP34 800 cm^2 Spring closes on air failure (extended through spring)	Spring range (bar)	0,2-1,0	Air supply pressure min. (bar) [2]	1,2	I.	(bar)	2,5 b)	1,5 b)					
					II.	(bar)	2,1 b)	1,2 b)					
					III.	(bar)	1,8 e)	1 e)					
		0,4-1,2		1,4	I.	(bar)	7 b)	4,4 b)	2,7 b)	1,6	1		
					II.	(bar)	6,6 b)	4,1 b)	2,5 b)	1,4			
					III.	(bar)	6,3 d)	3,9 d)	2,3 d)	1,2 a)			
		0,8-2,4		2,7	I.	(bar)	16	10,4	6,5	4	2,7		
					II.	(bar)	15,5	10,1	6,3	3,9	2,6		
					III.	(bar)	15,2 b)	9,9 b)	6,2 b)	3,7	2,5		
		1,0-2,0		2,4	I.	(bar)						1,9	1,1
					II.	(bar)						1,8	1,1
					III.	(bar)						1,7	1
		1,5-3,0		3,3	I.	(bar)				8,4	5,7		
					II.	(bar)				8,2	5,6		
					III.	(bar)				8,1	5,5		
		2,0-4,0		4,5	I.	(bar)				11,5	7,9	4,3	2,7
					II.	(bar)				11,3	7,8	4,2	2,6
					III.	(bar)				11,2	7,7	4,2	2,6
		2,1-3,0		3,3	I.	(bar)	40	29,7	19				
					II.	(bar)	40	29,4	18,8				
					III.	(bar)	40 a)	29,2 a)	18,7 a)				
		2,4-3,6		4,5	I.	(bar)		34,2	21,9				
					II.	(bar)		33,9	21,7				

DN						65	80	100	125	150	200	250
Parabolic plug	Kvs-value			(m^3/h)		63 40	100 63	160 100	250 160	400 250	--	--
	max. diff. pressure [1]			(bar)		8	4	1,5	1	1	--	--
V-port plug	Kvs-value			(m^3/h)		63	100	160	250	400	630	1000
	max. diff. pressure [1]			(bar)		30	25	25	10	10	5	5
Seat-ø				(mm)		66	81	101	126	151	201	251
Travel				(mm)		30			50		65	
DP34 800 cm^2 Spring opens on air failure (retracted through spring)	Air supply pressure min. (bar) [2]	1,4	I.	(bar)		7 b)	4,4 b)	2,7 b)	1,6	1		
			II.	(bar)		6,6 b)	4,1 b)	2,5 b)	1,4			
			III.	(bar)		6,3 e)	3,9 e)	2,3 e)	1,2 a)			
		2	I.	(bar)		20,5 b)	13,3 b)	8,4 b)	5,3	3,6	1,9	1,1
			II.	(bar)		20 b)	13 b)	8,2 b)	5,1	3,5	1,8	1,1
			III.	(bar)		19,7 e)	12,9 e)	8,1 e)	5 a)	3,4 a)	1,7 a)	1 a)
		3	I.	(bar)		40 b)	28,2 b)	18 b)	11,5	7,9	4,3	2,7
			II.	(bar)		40 b)	27,9 b)	17,8 b)	11,3	7,8	4,2	2,6
			III.	(bar)		40 e)	27,7 e)	17,7 e)	11,2 a)	7,7 a)	4,2 a)	2,6 a)
		4	I.	(bar)			40 b)	27,6 b)	17,7	12,2	6,8	4,3
			II.	(bar)			40 b)	27,5 b)	17,5	12,1	6,7	4,2
			III.	(bar)					17,4 a)	12 a)	6,6 a)	4,2 a)
		5	I.	(bar)					23,9	16,6	9,2	5,8
			II.	(bar)					23,7	16,5	9,1	5,8
			III.	(bar)					23,6 a)	16,3 a)	9,1 a)	5,8 a)
		6	I.	(bar)					30,9	20,9	11,7	7,4
			II.	(bar)					29,9	20,8	11,6	7,4

I. Fig. 440: PTFE-V-ring unit (DN15-150) / EPDM-sealing
II. Fig. 440: PTFE- / pure graphite-packing
III. Fig. 441: Bellows seal

[1] max. differential pressure drop

[2] Air supply pressure max. to actuator: 6 bar Restriction: a) 5 bar b) 4,5 bar c) 4 bar d) 3,5 bar e) 3 bar

max. permissible closing pressures on flow-to-open P2 = 0.
Observe pressure-temperature-limits, refer to page 2.

DN							200	250
V-port plug	Kvs-value					(m^3/h)	630	1000
	max. diff. pressure [1]					(bar)	5	5
Seat-ø						(mm)	201	251
Travel						(mm)	65	
DP34T 1600 cm² **Spring closes on air failure** (extended through spring)	Spring range (bar)	0,4-1,2	Air supply pressure min. (bar) [2]	1,7	I.	(bar)	1,4 b)	
					II.	(bar)	1,3 b)	
					III.	(bar)	1,2 d)	
		1,0-2,0		2,5	I.	(bar)	4,3 a)	2,7 a)
					II.	(bar)	4,2 a)	2,6 a)
					III.	(bar)	4,2 c)	2,6 c)
		2,0-4,0		4,5	I.	(bar)	9,2	5,8
					II.	(bar)	9,1	5,8
					III.	(bar)	9,1	5,8

DN				200	250
V-port plug	Kvs-value		(m^3/h)	630	1000
	max. diff. pressure [1]		(bar)	5	5
Seat-ø			(mm)	201	251
Travel			(mm)	65	
DP34T 1600 cm² **Spring opens on air failure** (retracted through spring)	Air supply pressure min. (bar) [2]	1,5	I. (bar)	1,9 b)	1,1 b)
			II. (bar)	1,8 b)	1,1 b)
			III. (bar)	1,7 e)	1 e)
		2	I. (bar)	4,3 b)	2,7 b)
			II. (bar)	4,2 b)	2,6 b)
			III. (bar)	4,2 e)	2,6 e)
		3	I. (bar)	9,2 b)	5,8 b)
			II. (bar)	9,1 b)	5,8 b)
			III. (bar)	9,1 e)	5,8 e)
		4	I. (bar)	14,1 b)	9 b)
			II. (bar)	14 b)	8,9 b)
		4,5	I. (bar)	16,6 b)	10,6 b)
			II. (bar)	16,5 b)	10,5 b)

I. Fig. 440: EPDM-sealing
II. Fig. 440: PTFE- / pure graphite-packing
III. Fig. 441: Bellows seal

[1] max. differential pressure drop

[2] Air supply pressure max. to actuator: 6 bar Restriction: a) 5 bar b) 4,5 bar c) 4 bar d) 3,5 bar e) 3 bar

max. permissible closing pressures on flow-to-open P2 = 0.
Observe pressure-temperature-limits, refer to page 2.

DN							200	250
V-port plug	Kvs-value					(m^3/h)	630	1000
	max. diff. pressure [1]					(bar)	5	5
Seat-ø						(mm)	201	251
Travel						(mm)	65	
DP34Tri 2400 cm^2 Spring closes on air failure 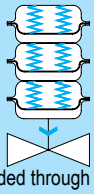 (extended through spring)	Spring range (bar)	0,4-1,2	Air supply pressure min. (bar) [2]	1,7	I.	(bar)	2,4 d)	1,4 d)
					II.	(bar)	2,3 d)	1,4 d)
					III.	(bar)	2,2 f)	1,4 f)
		1,0-2,0		2,5	I.	(bar)	6,8 b)	4,3 b)
					II.	(bar)	6,7 b)	4,2 b)
					III.	(bar)	6,6 d)	4,2 d)
		1,5-3,0		3,5	I.	(bar)	10,4 a)	6,6 a)
					II.	(bar)	10,3 a)	6,6 a)
					III.	(bar)	10,3 b)	6,5 b)
		2,0-4,0		4,5	I.	(bar)	14,1	9
					II.	(bar)	14	8,9

I. Fig. 440: EPDM-sealing
II. Fig. 440: PTFE- / pure graphite-packing
III. Fig. 441: Bellows seal

[1] max. differential pressure drop

[2] Air supply pressure max. to actuator: 5 bar Restriction: a) 5 bar b) 4,5 bar c) 4 bar d) 3,5 bar e) 3 bar

Control valve in straightway form with electric actuator ARI-PREMIO

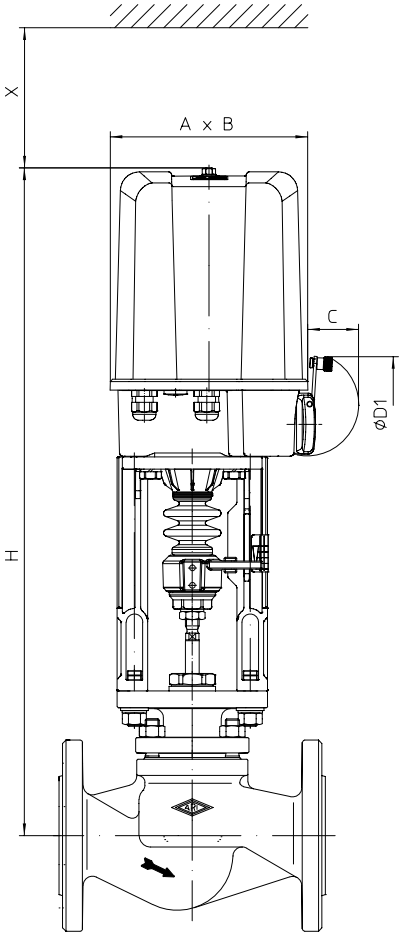

Fig. 440

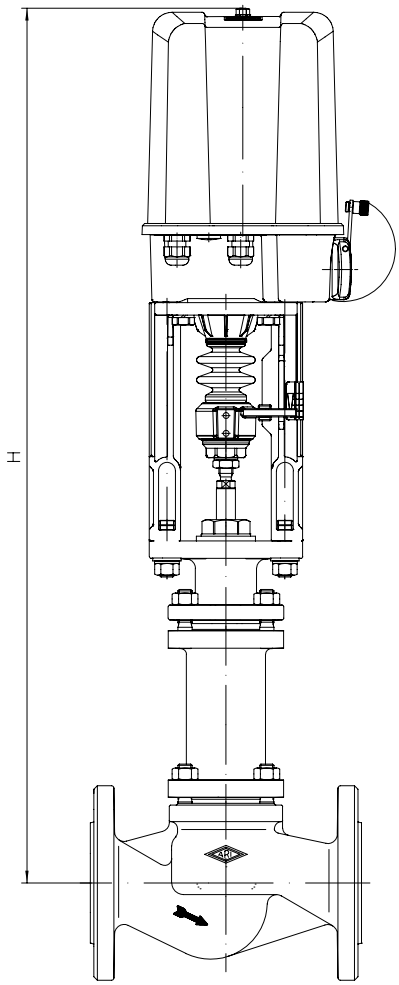

Fig. 441

Actuator data		2,2 - 5 kN	12 - 15 kN
A	(mm)	171	210
B	(mm)	156	184
C	(mm)	50	97
Ø D1	(mm)	90	130
X	(mm)	150	200

Supply voltage: 230V 50Hz
Other voltages: 24V 50/60Hz; 115V 50/60Hz; 230V 60Hz
Technical data for actuator refer to data sheet ARI-PREMIO/PREMIO-Plus 2G

Heights and weights

DN				15	20	25	32	40	50	65	80	100	125	150	200	250
Fig. 440	**2,2 kN**	H	(mm)	550	550	558	558	565	571	584	599	618	--	--	--	--
		PN16	(kg)	9	10	11	12	14	17	22	28	38	--	--	--	--
		PN40	(kg)	10	11	12	13	15	18	25	31	44	--	--	--	--
	5 kN	H	(mm)	550	550	558	558	565	571	584	599	618	690	750	--	--
		PN16	(kg)	--	--	12	13	15	18	23	29	39	56	79	--	--
		PN40	(kg)	--	--	13	14	17	20	27	33	45	62	84	--	--
	12 kN	H	(mm)	--	--	---	--	740	746	759	774	793	832	892	1008	1068
	15 kN	PN16	(kg)	--	--	--	--	19	22	27	33	43	60	83	155	270
		PN40	(kg)	--	--	--	--	21	24	31	37	49	66	88	187	302
Fig. 441	**2,2 kN**	H	(mm)	735	735	743	743	734	736	820	832	848	--	--	--	--
		PN16	(kg)	13	13	14	17	19	22	25	36	51	--	--	--	--
		PN40	(kg)	15	17	19	22	28	31	38	48	64	--	--	--	--
	5 kN	H		735	735	743	743	734	736	820	832	848	1045	1076	--	--
		PN16	(kg)	15	15	16	18	21	23	26	37	53	72	94	--	--
		PN40	(kg)	17	18	21	24	30	32	39	49	66	83	99	--	--
	12 kN	H	(mm)	--	--	--	--	909	911	995	1007	1023	1187	1218	1429	1493
	15 kN	PN16	(kg)	--	--	--	--	25	27	30	41	57	76	89	179	293
		PN40	(kg)	--	--	--	--	34	36	43	53	70	87	103	214	329

Other dimensions refer to pages 20-21.

max. permissible closing pressures on flow-to-open P2 = 0.
Observe pressure-temperature-limits, refer to page 2.

DN				15	20	25	32	40	50	65	80	100	125	150	200	250
Parabolic plug	Kvs-value		(m^3/h)	4 2,5	6,3 4 / 2,5	10 6,3	16 10	25 16	40 25	63 40	100 63	160 100	250 160	400 250	--	--
	max. diff. pressure [1]		(bar)	40	40	40	40	30	20	8	4	1,5	1	1	--	--
V-port plug	Kvs-value		(m^3/h)	--	--	--	--	--	--	63	100	160	250	400	630	1000
	max. diff. pressure [1]		(bar)	--	--	--	--	--	--	30	25	25	10	10	5	5
Seat-Ø			(mm)	21	21	27	31	41	51	66	81	101	126	151	201	251
Travel			(mm)	20						30			50		65	
2,2 kN	Closing pressure	I.	(bar)	40	40	30,8	23,1	12,8	8	4,3	2,7	1,5				
		II.	(bar)	40	40	28,8	21,6	11,9	7,4	3,9	2,3	1,3				
		III.	(bar)	30,7	30,7	27,1	20,4	10,6	6,5	3,6	2,2	1,2				
	Operating time (50 Hz)		(s)	53						79						
	Operating speed		(mm/s)	0,38												
5 kN	Closing pressure	I.	(bar)			40	40	33,2	21,3	12,3	8	4,9	3	2		
		II.	(bar)			40	40	32,3	20,7	11,9	7,6	4,7	2,9	1,9		
		III.	(bar)	40	40	40	40	31	19,8	11,6	7,5	4,6	2,7	1,8		
	Operating time (50 Hz)		(s)	53						79			132			
	Operating speed		(mm/s)	0,38												
12 kN	Closing pressure	I.	(bar)					40	40	32,3	21,2	13,5	8,5	5,9	3,2	2
		II.	(bar)					40	40	31,8	20,9	13,3	8,4	5,8	3,1	1,9
		III.	(bar)					40	40	31,6	20,7	13,2	8,2	5,6	3	1,9
	Operating time (50 Hz)		(s)					53		79			132		171	
	Operating speed		(mm/s)					0,38								
15 kN	Closing pressure	I.	(bar)							40	26,9	17,2	10,9	7,5	4,1	2,6
		II.	(bar)							40	26,6	17	10,8	7,4	4	2,5
		III.	(bar)							40	26,4	16,9	10,6	7,3	4	2,5
	Operating time (50 Hz)		(s)							79			132		171	
	Operating speed		(mm/s)							0,38						

I. Fig. 440: PTFE-V-ring unit (DN15-150) / EPDM-sealing
II. Fig. 440: PTFE- / pure graphite-packing
III. Fig. 441: Bellows seal

[1] max. differential pressure drop

Control valve in straightway form with electric actuator AUMA

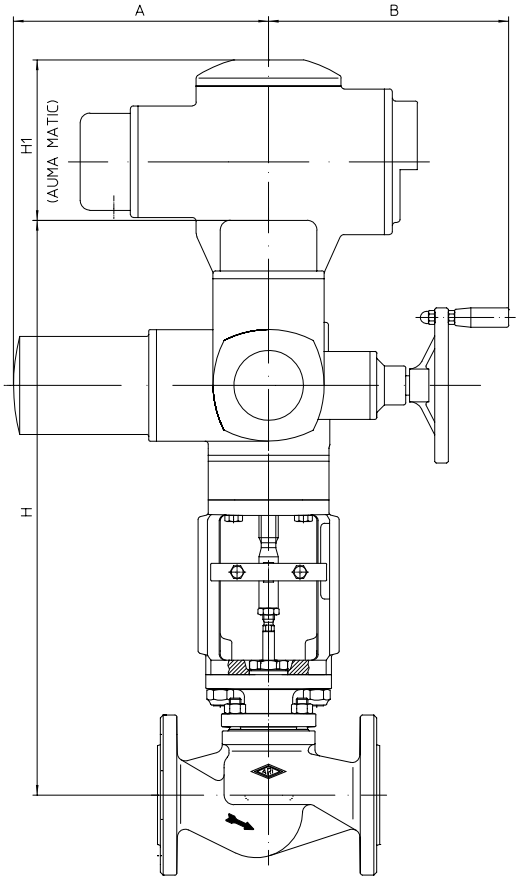

Fig. 440

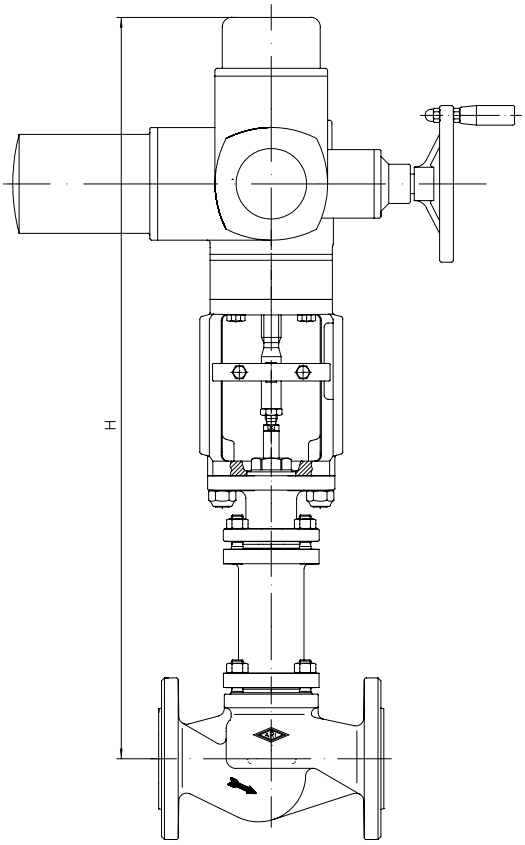

Fig. 441

Actuator data		SAR 07.2	SAR 07.6	SAR 10.2
A	(mm)	265		283
B	(mm)	249		254
H1 (AUMA MATIC)	(mm)	130		
Supply voltage: 400V 50Hz 3~ (Other voltages on request) Technical data for actuator refer to price list.				

Heights and weights

DN				40	50	65	80	100	125	150	200	250
Fig. 440	**SAR 07.2**	H	(mm)	611	617	630	645	664	703	763	--	--
		PN16	(kg)	36	39	44	50	60	77	100	--	--
		PN40	(kg)	37	40	47	53	66	83	105	--	--
	SAR 07.6	H	(mm)	--	617	630	645	664	703	763	844	904
		PN16	(kg)	--	40	46	51	61	79	102	178	292
		PN40	(kg)	--	42	49	55	68	85	106	210	324
	SAR 10.2	H	(mm)	--	--	642	657	676	715	775	856	916
		PN16	(kg)	--	--	48	54	64	81	104	180	295
		PN40	(kg)	--	--	51	57	70	87	109	212	327
Fig. 441	**SAR 07.2**	H	(mm)	780	782	866	878	894	1058	1089	--	--
		PN16	(kg)	41	44	47	58	73	93	114	--	--
		PN40	(kg)	50	53	60	70	86	104	120	--	--
	SAR 07.6	H	(mm)	--	782	866	878	894	1058	1089	1289	1301
		PN16	(kg)	--	45	48	59	75	95	116	201	315
		PN40	(kg)	--	54	61	71	88	105	122	236	351
	SAR 10.2	H	(mm)	--	--	--	--	--	1070	1101	1349	1361
		PN16	(kg)	--	--	--	--	--	97	118	203	318
		PN40	(kg)	--	--	--	--	--	108	124	239	353

For version with AUMA SAR Ex other heights.
Other dimensions refer to pages 20-21.

max. permissible closing pressures on flow-to-open P2 = 0.
Observe pressure-temperature-limits, refer to page 2.

Fig. 440

DN					40	50	65	80	100	125	150	200	250
Parabolic plug	Kvs-value			(m^3/h)	25 16	40 25	63 40	100 63	160 100	250 160	400 250	--	--
	max. diff. pressure [1]			(bar)	30	20	8	4	1,5	1	1	--	--
V-port plug	Kvs-value			(m^3/h)	--	--	63	100	160	250	400	630	1000
	max. diff. pressure [1]			(bar)	--	--	30	25	25	10	10	5	5
Seat-Ø				(mm)	41	51	66	81	101	126	151	201	251
Travel				(mm)	20		30			50		65	
SAR 07.2 Output drive Form A TR 20 x 4 - LH	Closing pressure	shut off	I./II.	(bar)	40	40	40	29,7	19	12,1	8,3		
		controlling [2]	I./II.	(bar)	40	36,5	21,4	14	8,8	5,5	3,7		
	Torque			(Nm)	15	20	30	30	30	30	30		
	Operating time (50 Hz)			(s)	54		56			94			
	Output drive			(rpm)	5,6		8			8			
SAR 07.6 Output drive Form A TR 26 x 5 - LH	Closing pressure	shut off	I./II.	(bar)		40	40	40	26,9	17,2	11,9	6,5	4,1
		controlling [2]	I./II.	(bar)		40	30,5	20	12,8	8	5,5	2,9	1,8
	Torque			(Nm)		30	40	60	60	60	60	60	60
	Operating time (50 Hz)			(s)		43	64			55		71	
	Output drive			(rpm)		5,6	5,6			11		11	
SAR 10.2 Output drive Form A TR 26 x 5 - LH	Closing pressure	shut off	I./II.	(bar)			40	40	31,6	29,3	20,3	13,7	8,7
		controlling [2]	I./II.	(bar)			40	40	26,9	17,2	11,9	6,5	4,1
	Torque			(Nm)			60	60	70	100	100	120	120
	Operating time (50 Hz)			(s)			64			55		71	
	Output drive			(rpm)			5,6			11		11	

Fig. 441

DN					40	50	65	80	100	125	150	200	250
Parabolic plug	Kvs-value			(m^3/h)	25 16	40 25	63 40	100 63	160 100	250 160	400 250	--	--
	max. diff. pressure [1]			(bar)	30	20	8	4	1,5	1	1	--	--
V-port plug	Kvs-value			(m^3/h)	--	--	63	100	160	250	400	630	1000
	max. diff. pressure [1]			(bar)	--	--	30	25	25	10	10	5	5
Seat-Ø				(mm)	41	51	66	81	101	126	151	201	251
Travel				(mm)	20		30			50		65	
SAR 07.2 Output drive Form A TR 20 x 4 - LH	Closing pressure	shut off	III.	(bar)	40	40	40	29,5	18,9	11,9	8,2		
		controlling [2]	III.	(bar)	40	35,7	21,1	13,8	8,7	5,3	3,6		
	Torque			(Nm)	15	20	30	30	30	30	30		
	Operating time (50 Hz)			(s)	54		56			94			
	Output drive			(rpm)	5,6		8			8			
SAR 07.6 Output drive Form A TR 26 x 5 - LH	Closing pressure	shut off	III.	(bar)		40	40	30,8	19,7	17	11,7	6,5	4,1
		controlling [2]	III.	(bar)		40	30,2	19,8	12,6	7,9	5,4	2,9	1,8
	Torque			(Nm)		30	40	45	45	60	60	60	60
	Operating time (50 Hz)			(s)		43	64			55		71	
	Output drive			(rpm)		5,6	5,6			11		11	
SAR 10.2 Output drive Form A TR 26 x 5 - LH	Closing pressure	shut off	III.	(bar)						26,1	18,1	10,1	6,4
		controlling [2]	III.	(bar)						17	11,7	6,5	4,1
	Torque			(Nm)						90	90	90	90
	Operating time (50 Hz)			(s)						55		71	
	Output drive			(rpm)						11		11	

I. Fig. 440: PTFE-V-ring unit (DN15-150) / EPDM-sealing
II. Fig. 440: PTFE- / pure graphite-packing
III. Fig. 441: Bellows seal

[1] max. differential pressure drop

[2] Restrictions through max. permissible torque of the actuator at controlling operation.

Control valve in straightway form with electric actuator FR 1.2 with fail-safe function

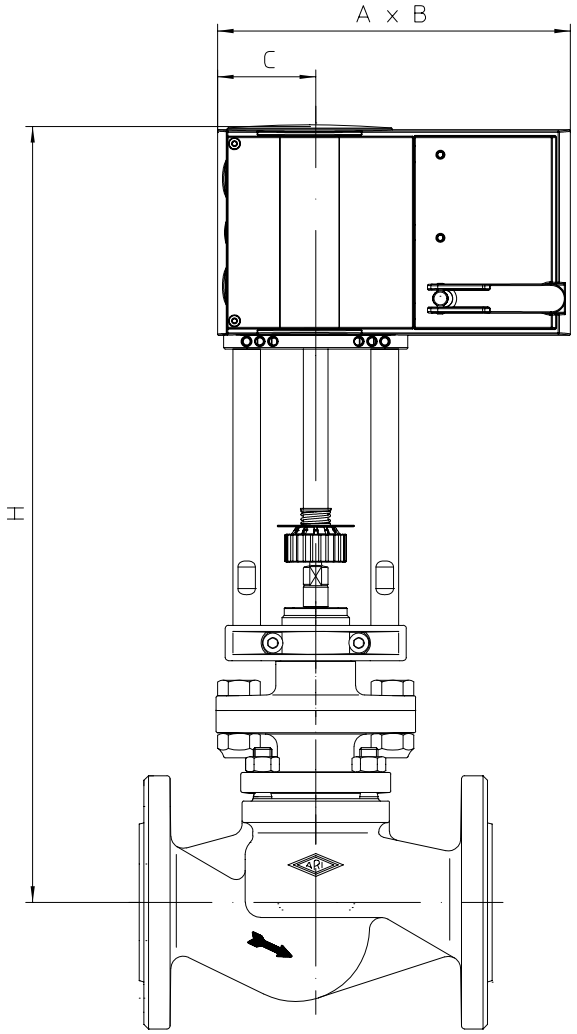

Fig. 440

Actuator data		FR 1.2
A	(mm)	230
B	(mm)	120
C	(mm)	64

Supply voltage: 24V 50/60Hz 1~, 24VDC, 230V 50/60Hz 1~
Technical data for actuator refer to data sheet FR1.2.

Heights and weights

DN					15	20	25	32	40	50	65	80	100
Fig. 440	**FR 1.2**	H		(mm)	502	502	510	510	517	523	536	551	570
		Parabolic plug	PN16	(kg)	10	10	11	13	15	18	23	28	39
			PN40	(kg)	10	11	12	14	16	19	26	32	45
		Parabolic pressure balanced plug	PN16	(kg)	--	--	--	--	16	20	26	32	44
			PN40	(kg)	--	--	--	--	17	21	29	36	50

Other dimensions refer to pages 20-21.

max. permissible closing pressures on flow-to-open P2 = 0.
Observe pressure-temperature-limits, refer to page 2.

Fig. 440 Parabolic plug

DN				15	20	25	32	40	50	65	80	100
Parabolic plug	Kvs-value		(m^3/h)	4 2,5	6,3 4 / 2,5	10 6,3	16 10	25 16	40 25	63 40	100 63	160 100
	max. diff. pressure [1]		(bar)	40	40	40	40	30	20	8	4	1,5
Seat-ø			(mm)	21	21	27	31	41	51	66	81	101
Travel			(mm)	20						30		
FR 1.2 2 kN	Closing pressure	I.	(bar)	40	40	27,5	20,6	11,3	7	3,8	2,3	1,3
	Operating time (factory setting)		(s)	40						60		
	Operating time on electrical power failure		(s)	28						35		

Fig. 440 Parabolic pressure balanced plug

DN				15	20	25	32	40	50	65	80	100
Parabolic plug	Kvs-value		(m^3/h)					25 16	40 25	63 40	100 63	160 100
	max. diff. pressure [1]		(bar)					30	20	8	4	1,5
Seat-ø			(mm)					41	51	66	81	101
Travel			(mm)					20		30		
FR 1.2 2 kN	Closing pressure	I.	(bar)					40	40	40	40	25
	Operating time (factory setting)		(s)					40		60		
	Operating time on electrical power failure		(s)					28		35		

I. **Fig. 440: PTFE-V-ring unit (Medium temperature restricted to 200°C)**

[1] max. differential pressure drop

Control valve in straightway form with electric actuator FR 2.1 / FR 2.2

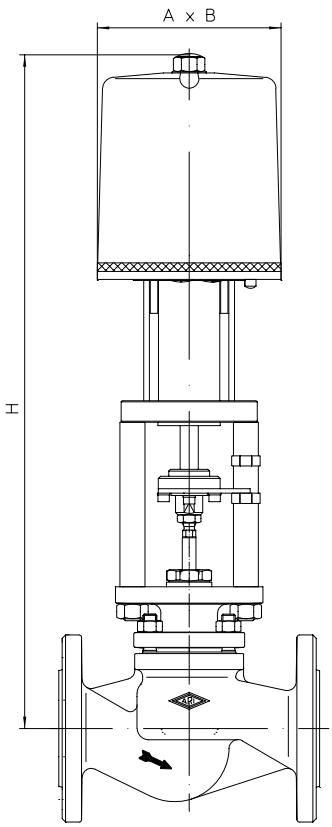

Fig. 440

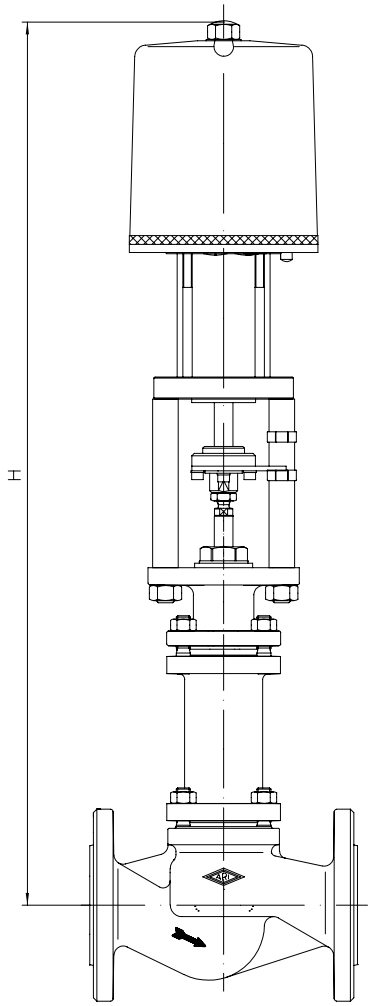

Fig. 441

Actuator data		FR 2.1 / 2.2
A	(mm)	162
B	(mm)	162

Supply voltage: 230V 50Hz
Other voltages: 24V 50/60Hz; 230V 60Hz
Technical data for actuator refer to data sheet FR2.1/2.2

Control valves Type 440/441 - FR 2.1-2.2,
actuator type approved acc. to DIN EN 14597

Heights and weights

DN					15	20	25	32	40	50	65	80	100
Fig. 440	FR 2.1	H		(mm)	579	579	587	587	594	600	613	628	647
	FR 2.2			(mm)	616	616	624	624	631	637	650	665	684
	FR 2.1 FR 2.2	Parabolic plug	PN16	(kg)	12	13	14	16	17	20	25	31	41
			PN40	(kg)	13	14	15	16	19	22	29	35	47
		Parabolic pressure balanced plug	PN16	(kg)	--	--	--	--	18	22	28	35	46
			PN40	(kg)	--	--	--	--	20	24	32	39	52
Fig. 441	FR 2.1	H		(mm)	764	764	772	772	763	765	849	861	877
	FR 2.2			(mm)	801	801	809	809	800	802	886	898	914
	FR 2.1 FR 2.2	Parabolic plug	PN16	(kg)	17	17	18	20	23	25	28	39	55
			PN40	(kg)	19	20	23	26	32	34	41	51	68
		Parabolic pressure balanced plug	PN16	(kg)	--	--	--	--	24	27	31	43	60
			PN40	(kg)	--	--	--	--	33	36	44	55	73

Other dimensions refer to pages 20-21.

Fig. 440 / 441 Parabolic plug

DN				15	20	25	32	40	50	65	80	100
Parabolic plug	Kvs-value		(m^3/h)	4 2,5	6,3 4 / 2,5	10 6,3	16 10	25 16	40 25	63 40	100 63	160 100
	max. diff. pressure [1]		(bar)	40	40	40	40	30	20	8	4	1,5
Seat-ø			(mm)	21	21	27	31	41	51	66	81	101
Travel			(mm)	20						30		
FR 2.1 **1 kN**	Closing pressure	I.	(bar)	18	18	10,3	7,4	3,6	2			
		II.	(bar)	16	16	9	6,5	3,2	1,7			
		III.	(bar)	9	9	7,4	5,2	1,9	0,9			
	Operating time (50 Hz)		(s)	69								
	Operating speed		(mm/s)	0,29								
	Operating time on electrical power failure		(s)	5,5								
FR 2.2 **2,2 kN**	Closing pressure	I.	(bar)	40	40	30,8	23,1	12,8	8	4,3	2,7	1,5
		II.	(bar)	40	40	28,8	21,6	11,9	7,4	3,9	2,3	1,3
		III.	(bar)	30,7	30,7	27,1	20,4	10,6	6,5	3,6	2,2	1,2
	Operating time (50 Hz)		(s)	69						103		
	Operating speed		(mm/s)	0,29								
	Operating time on electrical power failure		(s)	5,5						8,5		

Fig. 440 / 441 Parabolic pressure balanced plug

DN				15	20	25	32	40	50	65	80	100
Parabolic plug	Kvs-value		(m^3/h)			10 6,3	16 10	25 16	40 25	63 40	100 63	160 100
	max. diff. pressure [1]		(bar)			40	40	30	20	8	4	1,5
Seat-ø			(mm)			27	31	41	51	66	81	101
Travel			(mm)	20						30		
FR 2.1 **1 kN**	Closing pressure	I.	(bar)			20	20	20	16	16	16	12
		II.	(bar)					20	16	16		
		III.	(bar)					16	15	2		
	Operating time (50 Hz)		(s)			69				103		
	Operating speed		(mm/s)			0,29						
	Operating time on electrical power failure		(s)			5,5				8,5		
FR 2.2 **2,2 kN**	Closing pressure	I.	(bar)					40	40	40	40	28
		II.	(bar)					40	40	40	40	28
		III.	(bar)					40	40	40	40	40
	Operating time (50 Hz)		(s)					69		103		
	Operating speed		(mm/s)					0,29				
	Operating time on electrical power failure		(s)					5,5		8,5		

Control valves Type 440/441 - FR 2.1-2.2,
actuator tape approved acc. to DIN EN 14597

I. **Fig. 440: PTFE-V-ring unit / EPDM-sealing**
II. **Fig. 440: PTFE- / pure graphite-packing**
III. **Fig. 441: Bellows seal**

[1] max. differential pressure drop

Control valve in straightway form

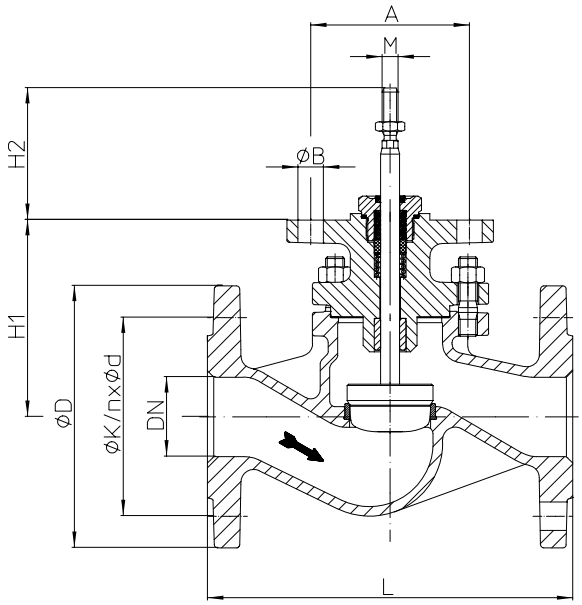

Fig. 440
DN15-150
(e.g. DP32-34, PREMIO 2-15kN, AUMA SAR 07.2-10.2)

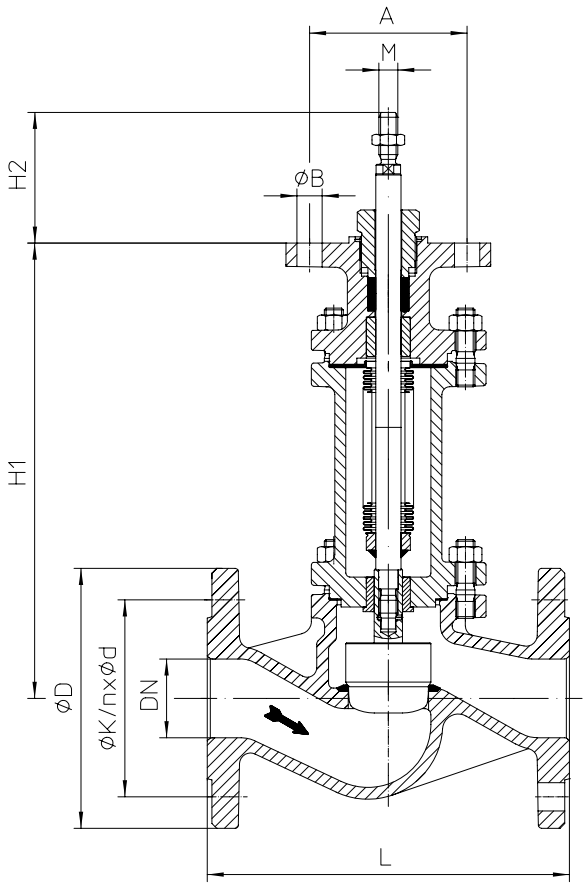

Fig. 441
DN15-150
(e.g. DP32-34, PREMIO 2-15kN, AUMA SAR 07.2-10.2)

DN			15	20	25	32	40	50	65	80	100	125	150
Dimensions													
M	Fig. 440	(mm)	M10						M14 x 1,5			M16 x 1,5	
	Fig. 441	(mm)	M12									M16	
H1	Fig. 440	(mm)	103		111		118	124	137	152	171	210	270
	Fig. 441	(mm)	288		296		287	289	373	385	401	565	596
H2	Fig. 440 / Fig. 441	(mm)	83										
A	Fig. 440 / Fig. 441	(mm)	100										
n x ØB	Fig. 440 / Fig. 441	(mm)	2 x 16										
Face-to-face dimension FTF series 1 according to DIN EN 558													
L		(mm)	130	150	160	180	200	230	290	310	350	400	480
Flanges acc. to DIN EN 1092-1/-2			Flange holes / -thickness tolerances acc. to DIN 2533/2544/2545										
ØD	PN16	(mm)	95	105	115	140	150	165	185	200	220	250	285
	PN25	(mm)									235	270	300
	PN40	(mm)											
ØK	PN16	(mm)	65	75	85	100	110	125	145	160	180	210	240
	PN25	(mm)									190	220	250
	PN40	(mm)											
n x Ød	PN16	(mm)	4 x 14	4 x 14		4 x 18			4 x 18	8 x 18	8 x 18		8 x 22
	PN25	(mm)							8 x 18		8 x 22	8 x 26	8 x 26
	PN40	(mm)											
Weights													
Fig. 440	PN16 (JL1040)	(kg)	3,6	4,3	5,2	6,8	8,7	11,6	16,7	22,4	32,5	49,7	72,9
	PN40 (1.0619+N)	(kg)	4,3	5,2	6,1	7,5	10	13	20	26	38,7	55,9	77,2
Fig. 441	PN16 (JL1040)	(kg)	8	8	9	11,5	14	16,5	19,5	30,5	46	65,8	87,2
	PN40 (1.0619+N)	(kg)	10	11,5	14	17	23	25,5	32,5	42,5	59	76,3	92,7
max. permissible thrust													
Fig. 440		(kN)	12,7						29,6			40,6	
Fig. 441		(kN)	18,2									37	

Control valve in straightway form

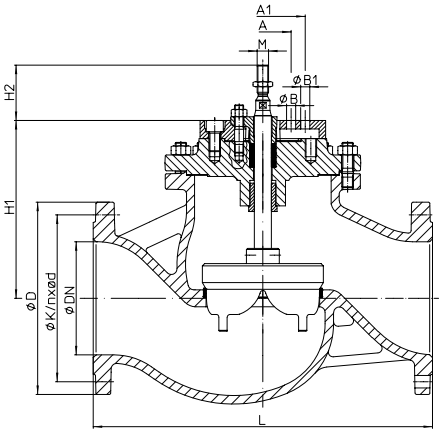

Fig. 440
DN200-250
(e.g. DP34-34Tri, PREMIO 12-15kN)

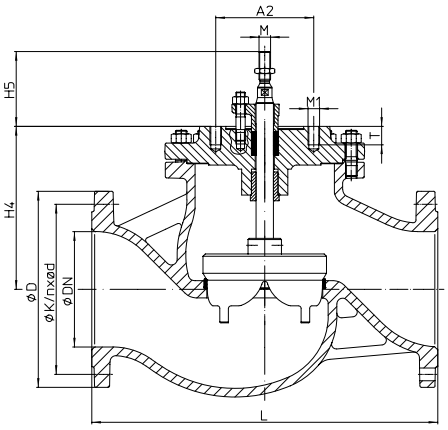

Fig. 440
DN200-250
(e.g. AUMA SAR 07.2-10.2)

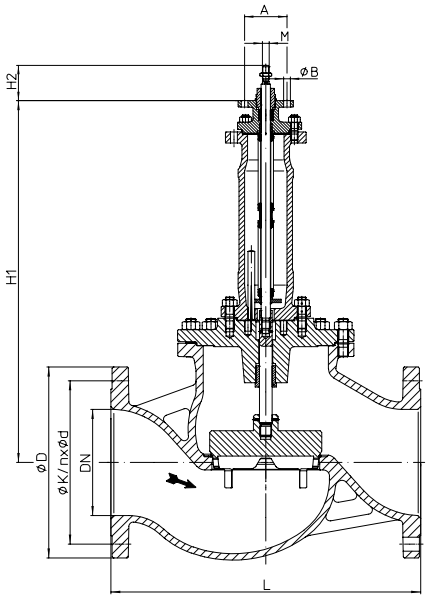

Fig. 441 M16
DN200-250
(e.g. PREMIO 12-15kN, AUMA SAR 07.2-10.2)

DN			200		250	
Dimensions						
M	Fig. 440	(mm)	M20			
	Fig. 441	(mm)	M16	M20	M16	M20
H1	Fig. 440	(mm)	312		372	
	Fig. 441	(mm)	792	723	856	782
H2	Fig. 440	(mm)	98			
	Fig. 441	(mm)	83	130	83	130
H4	Fig. 440	(mm)	280		340	
H5	Fig. 440	(mm)	130			
A	Fig. 440	(mm)	100			
	Fig. 441	(mm)	100	--	100	--
n x ØB	Fig. 440	(mm)	2 x 16			
	Fig. 441	(mm)	2 x 16	--	2 x 16	--
A1	Fig. 440	(mm)	150			
	Fig. 441	(mm)	--	150	--	150
n x ØB1	Fig. 440	(mm)	4 x 16			
	Fig. 441	(mm)	-	4 x 16	--	4 x 16
A2	Fig. 440	(mm)	170			
n x M1	Fig. 440	(mm)	8 x M20			
T	Fig. 440	(mm)	32			
Face-to-face dimension FTF series 1 according to DIN EN 558						
L		(mm)	600		730	
Flanges acc. to DIN EN 1092-1/-2						
ØD	PN16	(mm)	340		405	
	PN25	(mm)	360		425	
	PN40	(mm)	375		450	
ØK	PN16	(mm)	295		355	
	PN25	(mm)	310		370	
	PN40	(mm)	320		385	
n x Ød	PN16	(mm)	12x22		12x26	
	PN25	(mm)	12x26		12x30	
	PN40	(mm)	12x30		12x33	
Weights						
Fig. 440	PN16 (JL1040)	(kg)	145		259,3	
	PN40 (1.0619+N)	(kg)	176,8		291,4	
Fig. 441	PN16 (JL1040)	(kg)	158,1	167,2	282,2	281,3
	PN40 (1.0619+N)	(kg)	203,6	202	318,1	316,5
max. permissible thrust						
Fig. 440		(kN)	59,1			
Fig. 441		(kN)	34			

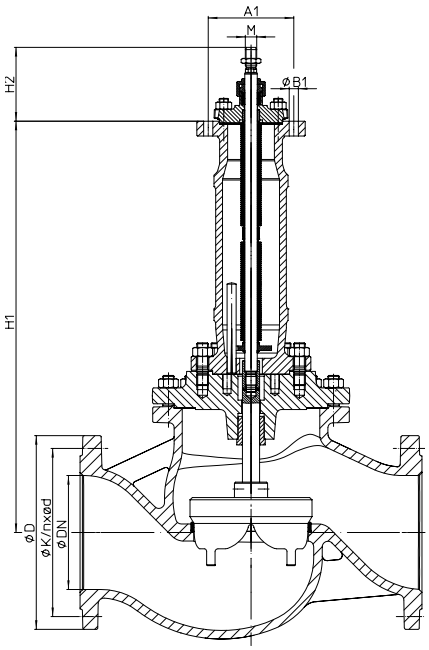

Fig. 441 M20
DN200-250
(e.g. DP34-34Tri)

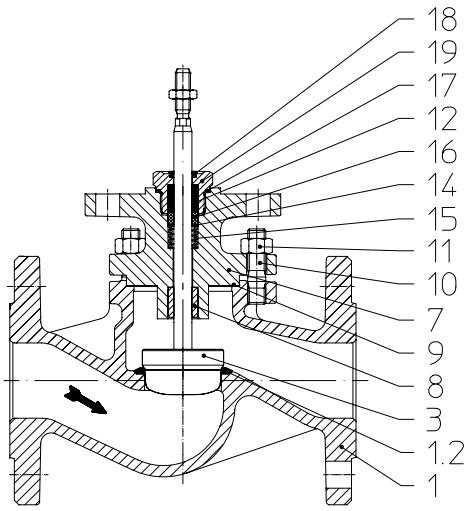

I. PTFE-V-ring unit

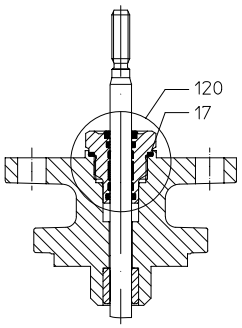

I. EPDM-sealing

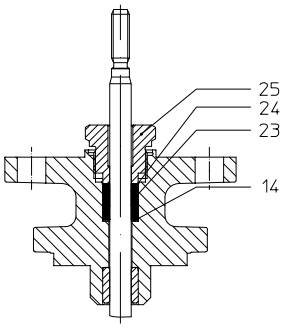

II. PTFE- / pure graphite-packing

Pos.	Sp.p.	Description	Fig. 12.440	Fig. 22.440 / Fig. 23.440	Fig. 34.440 / Fig. 35.440	Fig. 54.440 / 55.440
1		Body	EN-GJL-250 , EN-JL1040	EN-GJS-400-18U-LT, EN-JS1049	GP240GH+N, 1.0619+N	GX5CrNiMo19-11-2, 1.4408
1.2		Seat ring	X20Cr13+QT, 1.4021+QT		X20Cr13+QT, 1.4021+QT >DN50: G19 9 Nb Si, 1.4551	--
3	x	Plug	X20Cr13+QT, 1.4021+QT			X6CrNiMoTi17-12-2, 1.4571
7		Mounting bonnet	EN-GJS-400-18U-LT, EN-JS1049		GP240GH+N, 1.0619+N	GX5CrNiMo19-11-2, 1.4408
8		Giude bushing	X20Cr13+QT, 1.4021+QT (hardened)			X6CrNiMoTi17-12-2, 1.4571
9	x	Gasket	Pure graphite (CrNi laminated with graphite)			
10		Stud	25CrMo4, 1.7218			A4 - 70
11		Hexagon nuts	C35E, 1.1181			A4
12	Set: refer to Pos. 100	V-ring unit	PTFE			
14		Washer	X5CrNi18-10, 1.4301			
15		Compression spring	X10CrNi18-8, 1.4310			
16		Bush	PTFE (strengthened)			
17		Gasket	Cu / Soft iron			
18		Scraper	PTFE (strengthened)			
19		Coupling	X8CrNiS18-9, 1.4305			
23/24	x	Packing ring	PTFE or Pure graphite			
25	x	Coupling	X8CrNiS18-9, 1.4305			

Stem sealings Fig. 440			
23	x	Packing ring	PTFE
23/24	x	Packing ring	Pure graphite
100	x	V-ring unit set	Set of: Pos. 12, 14, 15, 16, 17, 18, 19
120	x	EPDM-sealing	EPDM / X8CrNiS18-9, 1.4305 (when spare part, also necessary: Pos. 17)
	└ Spare parts		

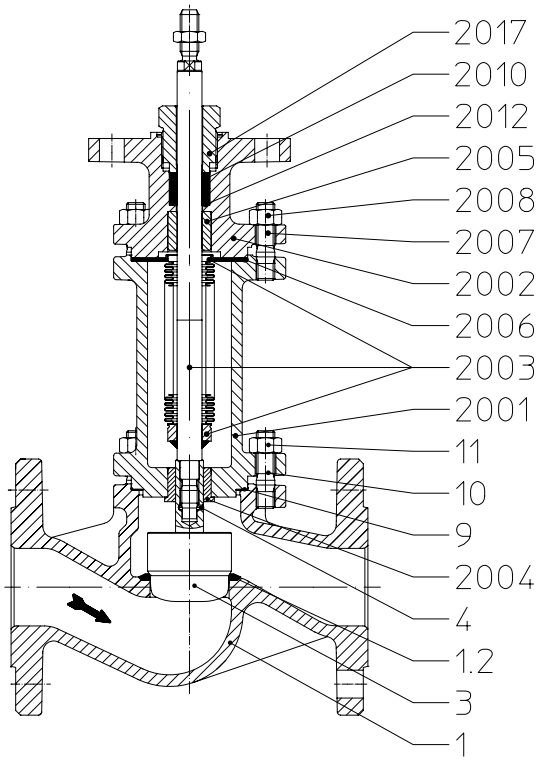

III. PTFE-packing / Pure graphite-packing

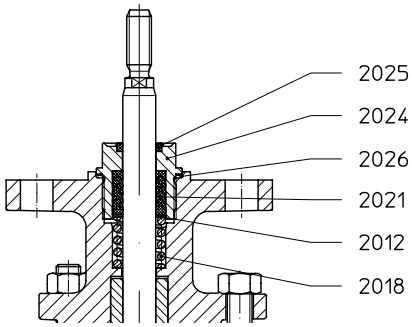

III. Stainless steel-bellow with V-ring unit

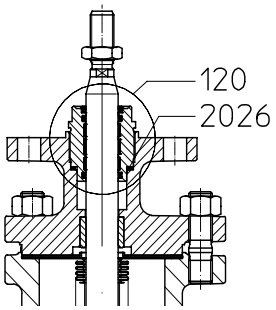

III. Stainless steel bellows seal with EPDM-sealing

Pos.	Sp.p.	Description	Fig. 12.441	Fig. 22.441 / Fig. 23.441	Fig. 34.441 / Fig. 35.441	Fig. 55.441
1		Body	EN-GJL-250 , EN-JL1040	EN-GJS-400-18U-LT, EN-JS1049	GP240GH+N, 1.0619+N	GX5CrNiMo19-11-2, 1.4408
1.2		Seat ring	X20Cr13+QT, 1.4021+QT		X20Cr13+QT, 1.4021+QT >DN50: G19 9 Nb Si, 1.4551	--
3	x	Plug	X20Cr13+QT, 1.4021+QT			X6CrNiMoTi17-12-2, 1.4571
4	x	Clamping sleeve	X10CrNi18-8, 1.4310			A4 - 70
9	x	Gasket	Pure graphite (CrNi laminated with graphite)			
10		Stud	25CrMo4, 1.7218			A4 - 70
11		Hexagon nuts	C35E, 1.1181			A4
2001		Bellows housing	EN-GJS-400-18U-LT, EN-JS1049		GP240GH+N, 1.0619+N	GX5CrNiMo19-11-2, 1.4408
2002		Mounting bonnet	EN-GJS-400-18U-LT, EN-JS1049		GP240GH+N, 1.0619+N	GX5CrNiMo19-11-2, 1.4408
2003	x	Stem- / Bellows unit	X20Cr13+QT, 1.4021+QT / X6CrNiTi18-10, 1.4541			X6CrNiMoTi17-12-2, 1.4571
2004		Giude bushing	X20Cr13+QT, 1.4021+QT (hardened)			X6CrNiMoTi17-12-2, 1.4571
2005		Giude bushing	X20Cr13+QT, 1.4021+QT (hardened)			X6CrNiMoTi17-12-2, 1.4571
2006	x	Gasket	Pure graphite (CrNi laminated with graphite)			
2007		Stud	25CrMo4, 1.7218			A4 - 70
2008		Hexagon nuts	C35E, 1.1181			A4
2010	x	Packing ring	Pure graphite			
2017		Coupling	X8CrNiS18-9, 1.4305			
2012	Set: refer to Pos. 100	Washer	X5CrNi18-10, 1.4301			
2018		Compression spring	X10CrNi18-8, 1.4310			
2021		V-ring unit	PTFE			
2024		Coupling	X8CrNiS18-9, 1.4305			
2025		Scraper	PTFE			
2026		Gasket	X6CrNiMoTi17-12-2, 1.4571			

Stem sealings Fig. 441			
2010	x	Packing ring	Pure graphite
2010	x	Packing ring	PTFE
100	x	V-ring unit set	Set of: Pos. 2012 - 2226
120	x	EPDM-sealing	EPDM / X8CrNiS18-9, 1.4305 (when spare part, also necessary: Pos. 2031)
	└ Spare parts		

myValve® - Your Valve Sizing-Program.

myValve® is a powerful software tool that not only helps you size your system components; it also gives you instant access to all other data about the selected product, such as order information, spare parts drawings, operating instructions, data sheets, etc., whenever you need it.

Contents:

Module ARI-control valves STEVI-calculation

- Sizing (calculation of flow quantity Kv, volume flow Q, pressure drop Δp, sound level and selecting the valve.)

Media:

Integrated media-databank (more than 160 media) with conditions:

- Vapours / gases
- Steam (saturated and superheated)
- Liquids

Special features:

- Project administration of the calculation and product data incl. spare part drawings concerning to project and tag number.
- Direct output or calculation and product data in PDF format.
- Product data could be taken for a direct order.
- SI- and ANSI-units with direct conversion to another databank.
- Settings with over pressure or absolute pressure.
- All ARI valves are integrated in a databank.
- Direct access concerning to the product on data sheets, operating instructions, pressure-temperature-diagram and spare part drawings
- Operation in company networks possible (no complex installations on individually PC's necessary).
- Extensive catalogue extending over several product groups.

System Requirements:

Windows operating systems, Linux, etc.