Pneumatic process valve, Y-pattern
DN 15 - 50

ARI-STEVI®AS 350
Pneumatic actuator
- with screwed sockets

- Piston actuator
- Required air supply pressure, max. 10 bar
- Operating pressure, max. 16 bar

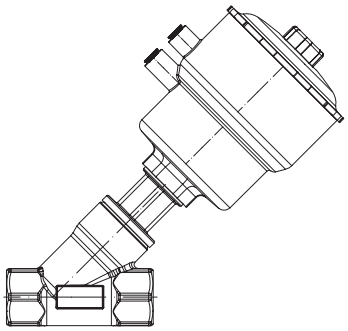

Page 2

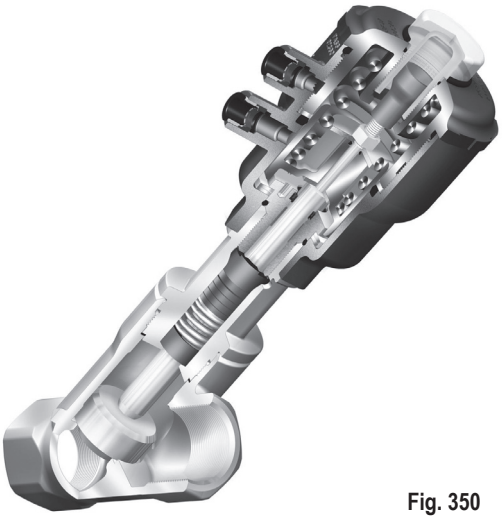

Fig. 350

ARI-STEVI®AS 350
Pneumatic actuator
- with butt weld ends

Pipe connection acc. to ISO 4200
Pipe connection acc. to DIN 11850

- Piston actuator
- Required air supply pressure, max. 10 bar
- Operating pressure, max. 16 bar

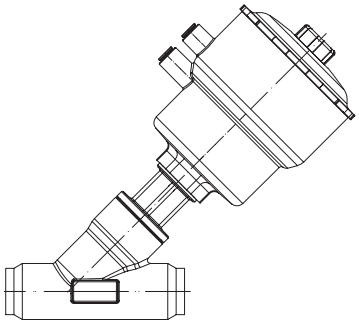

Page 4

ARI-STEVI®AS 350
Pneumatic actuator
- with flanges

- Piston actuator
- Required air supply pressure, max. 10 bar
- Operating pressure, max. 16 bar

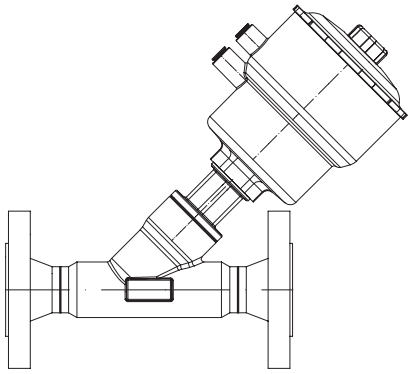

Page 6

Clamp connection acc. to DIN 32676 or BS4825-3 on request.

Features:

- Compact design
- Roller burnished stem
- Spring loaded PTFE-V ring packing unit
- Optical position indicator
- Mounting in any position, preferatbly actuator upwards
- Viscosity to 600 mm^2/s

Pneumatic process valve, Y-pattern with screwed sockets and pneumatic actuator

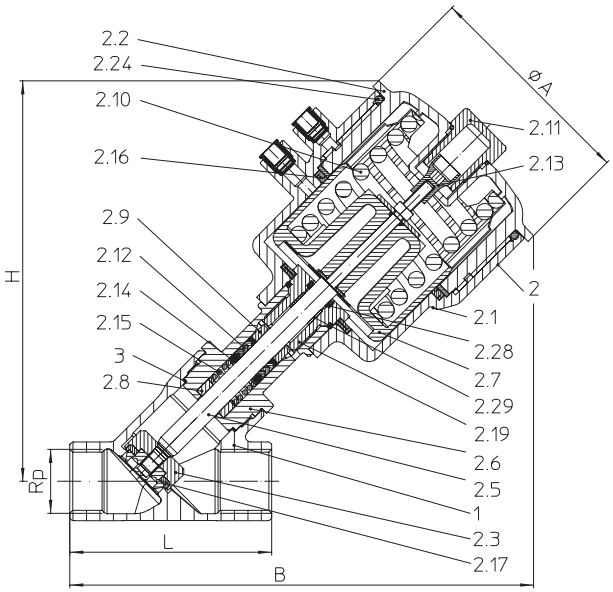

Fig. 350 Spring closes on air failure (NC)

Figure	Nominal pressure	Material	Nominal diameter
52.350....2	PN16	1.4408	DN15-50
72.350....2	PN16	CC491K	DN15-50

Stem sealing
- PTFE-V-ring unit -10°C to 180°C

Plug design
- Isolation plug with PTFE-soft sealing

Shut off class (seat / plug leakage classes)
- Metal / PTFE - Leakage class A acc. to DIN EN 12266-1
- Metal / FPM - Leakage class A acc. to DIN EN 12266-1 (optional)

Actuator material
- PA66 GF (Max. permissible ambient temperature +60°C)

Selection of possible applications

Industrial installations, processing technology, plant manufacturing, etc.
(other applications on request)

Selection of possible flow media

Cooling water, Warm water, Hot water, Steam, Oil, Air, Neutral gases, Alkalis, Alcohol, etc.
(other flow media on request)

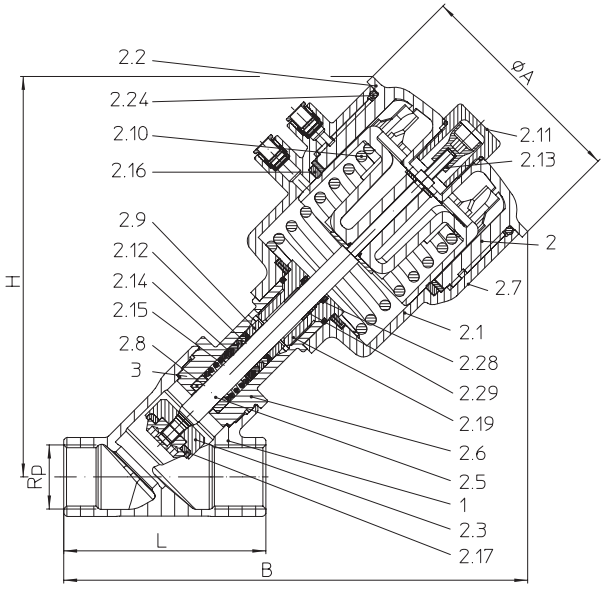

Fig. 350 Spring opens on air failure (optional) (NO)

Dimensions and weights

DN		15	20	25		32	40	50
		Rp 1/2	Rp 3/4	Rp 1		Rp 1 1/4	Rp 1 1/2	Rp 2
Actuator		**ATG50**	**ATG50**	**ATG50**	**ATG80**	**ATG80**	**ATG80**	**ATG80**
L	(mm)	85	95	105		120	130	150
H	(mm)	162	162	173	208	217	218	228
B	(mm)	191	196	206	241	256	260	279
ØA	(mm)	75	75	75	114	114	114	114
Rp (BSP)	(inch)	**1/2**	**3/4**	**1**		**1 1/4**	**1 1/2**	**2**
Weight (1.4408)	(kg)	1,4	1,5	1,8	2,7	3,3	3,6	4,6
Weight (CC491K)	(kg)	1,4	1,6	1,9	2,7	3,4	3,7	4,8

Face-to-face dimension series M4 acc. to DIN 3202 T4

Air supply pressure (Function: Spring closes on air failure (NC), on flow-to-open)

DN		15			20			25					32			40			50		
Actuator		ATG50			ATG50			ATG50		ATG80			ATG80			ATG80			ATG80		
Operating pressure max.	(bar)	6	10	16	6	10	16	6	10	6	10	16	6	10	16	6	10	16	6	10	4
Kvs-value	(m^3/h)	6,2			9,6			19,7		20,7			24,8			36,1			54,3		
Travel	(mm)	15			15			15		20			20			20			20		
Air supply pressure min.	(bar)	2,9	4,5	6,8	2,9	4,5	6,8	5,7	8,8	2	3,1	4,8	2,8	4,3	7,4	4,3	7,4	8,8	7	8,8	5

Air supply pressure diagram (Function: Spring opens on air failure (NO), on flow-to-open)

Actuator ATG 50

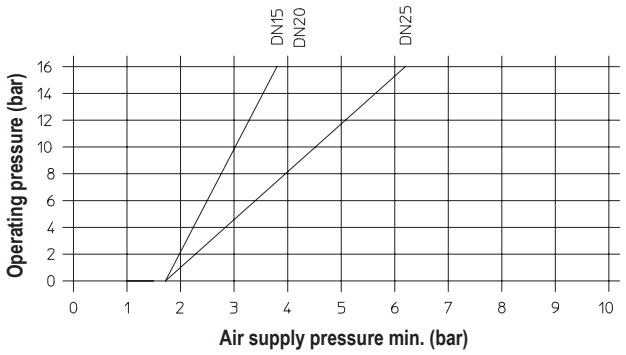

Actuator ATG 80

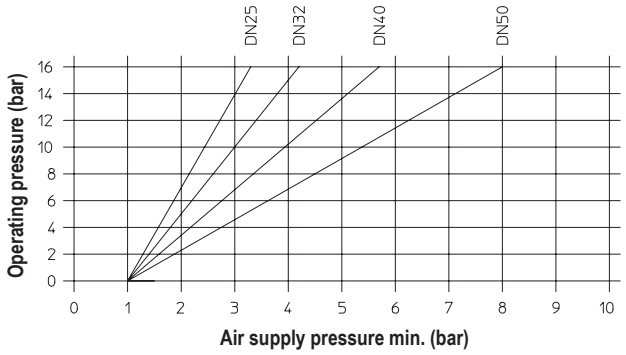

Parts

Pos.	Description	Fig. 52.350....2	Fig. 72.350....2
1	Body	GX5CrNiMo19-11-2, 1.4408	CuSn5Zn5Pb5-C, CC491K
2	Bonnet, cpl. *		
2.1	Actuator housing	PA66 GF	
2.2	Actuator cover	PA66 GF	
2.3	Plug	X6CrNiMoTi17-12-2, 1.4571	CuSn5Zn5Pb5-C, CC491K
2.5	Stem	X2CrNiMo17-12-2, 1.4404	
2.6	Hood	GX5CrNiMo19-11-2, 1.4408	CuSn5Zn5Pb5-C, CC491K
2.7	Piston	EN AW-AlCu6BiPb, EN AW-2011	
2.8	Bushing	PTFE	
2.9	Guide bushing	PA66 GF	
2.10	Spring	SH	
2.11	Sight glass	PA transparent	
2.12	V-ring unit	PTFE	
2.13	Indication	PA66	
2.14	Washer	1.4301	
2.15	Spring	X10CrNi18-8, 1.4310	
2.16	Sealing ring	NBR	
2.17	Sealing ring	PTFE	
2.19	Screw joint	X6CrNiMoTi17-12-2, 1.4571	CuSn5Zn5Pb5-C, CC491K
2.24	O-ring	NBR	
2.28	Rod seal	FPM	
2.29	Cylinder bushing	Stainless steel / PTFE	
3	Gasket *	PTFE / Graphite	
* Spare parts (Pos. 2.1 - 2.29 will be supplied as unit)			

Information / restriction of technical rules need to be observed!

A production allowance acc. to TRB 801 No. 45 exists (CC491K acc. to TRB 801 No. 45 is not allowed.)

The engineer, designing a system or a plant, is responsible for the selection of the correct valve.

Pneumatic process valve, Y-pattern with butt weld ends and pneumatic actuator

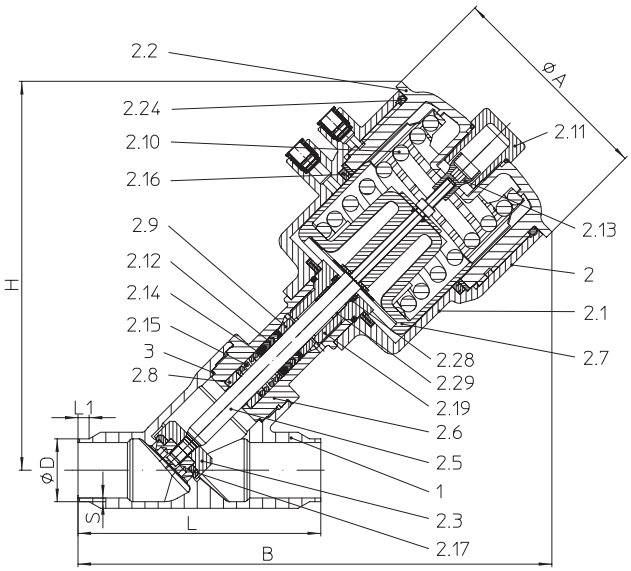

Fig. 350 Spring closes on air failure (NC)

Figure	Nominal pressure	Material	Nominal diameter
52.350....4	PN16	1.4408	DN15-50
Stem sealing • PTFE-V-ring unit -10°C to 180°C			
Plug design • Isolation plug with PTFE-soft sealing			
Shut off class (seat / plug leakage classes) • Metal / PTFE - Leakage class A acc. to DIN EN 12266-1 • Metal / FPM - Leakage class A acc. to DIN EN 12266-1 (optional)			
Actuator material • PA66 GF (Max. permissible ambient temperature +60°C)			

Selection of possible applications

Industrial installations, processing technology, plant manufacturing, etc.
(other applications on request)

Selection of possible flow media

Cooling water, Warm water, Hot water, Steam, Oil, Air, Neutral gases, Alkalis, Alcohol, etc.
(other flow media on request)

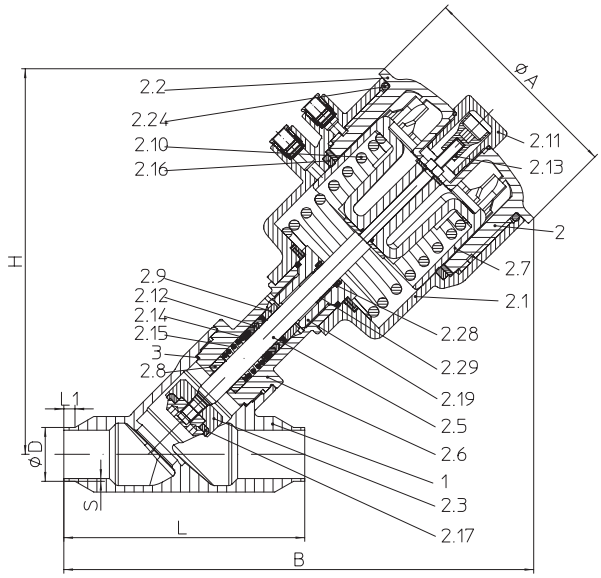

Fig. 350 Spring opens on air failure (optional) (NO)

Dimensions and weights

DN			15	20	25		32	40	50
Actuator			ATG50	ATG50	ATG50	ATG80	ATG80	ATG80	ATG80
L		(mm)	100	115	130		145	160	175
H		(mm)	162	162	173	208	217	218	228
B		(mm)	191	196	206	241	256	260	279
ØA		(mm)	75	75	75	114	114	114	114
Pipe connection acc. to ISO 4200	L	(mm)	100	115	130		145	160	175
	L1	(mm)	6	6	6		6	6	6
	ØD	(mm)	21,3	26,9	33,7		42,4	48,3	60,3
	S	(mm)	1,6	1,6	2		2	2	2
Pipe connection acc. to DIN 11850	L	(mm)	100	115	130		130	145	160
	L1	(mm)	6	6	6		6	6	6
	ØD	(mm)	19	23	29		35	41	53
	S	(mm)	1,5	1,5	1,5		1,5	1,5	1,5
Weight (1.4408)		(kg)	1,3	1,4	1,8	2,7	3,3	3,6	4,6

Air supply pressure (Function: Spring closes on air failure (NC), on flow-to-open)

DN		15			20			25					32			40			50		
Actuator		ATG50			ATG50			ATG50		ATG80			ATG80			ATG80			ATG80		
Operating pressure max.	(bar)	6	10	16	6	10	16	6	10	6	10	16	6	10	16	6	10	16	6	10	4
Kvs-value	(m^3/h)	6,2			9,6			19,7		20,7			24,8			36,1			54,3		
Travel	(mm)	15			15			15		20			20			20			20		
Air supply pressure min.	(bar)	2,9	4,5	6,8	2,9	4,5	6,8	5,7	8,8	2	3,1	4,8	2,8	4,3	7,4	4,3	7,4	8,8	7	8,8	5

Air supply pressure diagram (Function: Spring opens on air failure (NO), on flow-to-open)

Actuator ATG 50

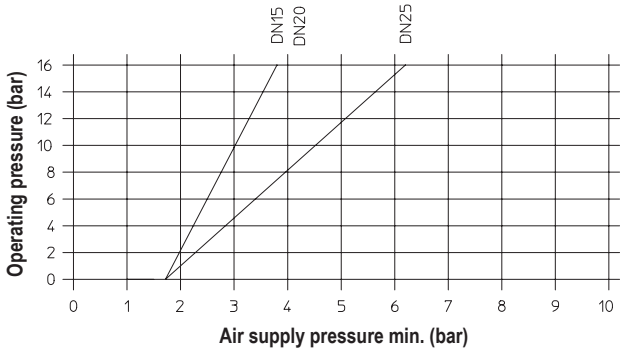

Actuator ATG 80

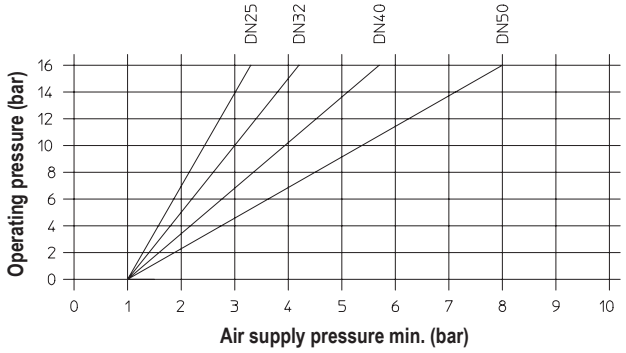

Parts

Pos.	Description	Fig. 52.350....4
1	Body	GX5CrNiMo19-11-2, 1.4408
2	Bonnet, cpl. *	
2.1	Actuator housing	PA66 GF
2.2	Actuator cover	PA66 GF
2.3	Plug	X6CrNiMoTi17-12-2, 1.4571
2.5	Stem	X2CrNiMo17-12-2, 1.4404
2.6	Hood	GX5CrNiMo19-11-2, 1.4408
2.7	Piston	EN AW-AlCu6BiPb, EN AW-2011
2.8	Bushing	PTFE
2.9	Guide bushing	PA66 GF
2.10	Spring	SH
2.11	Sight glass	PA transparent
2.12	V-ring unit	PTFE
2.13	Indication	PA66
2.14	Washer	1.4301
2.15	Spring	X10CrNi18-8, 1.4310
2.16	Sealing ring	NBR
2.17	Sealing ring	PTFE
2.19	Screw joint	X6CrNiMoTi17-12-2, 1.4571
2.24	O-ring	NBR
2.28	Rod seal	FPM
2.29	Cylinder bushing	Stainless steel / PTFE
3	Gasket *	PTFE / Graphite
* Spare parts (Pos. 2.1 - 2.29 will be supplied as unit)		

Information / restriction of technical rules need to be observed!

A production allowance acc. to TRB 801 No. 45 exists

The engineer, designing a system or a plant, is responsible for the selection of the correct valve.

Pneumatic process valve, Y-pattern with flanges and pneumatic actuator

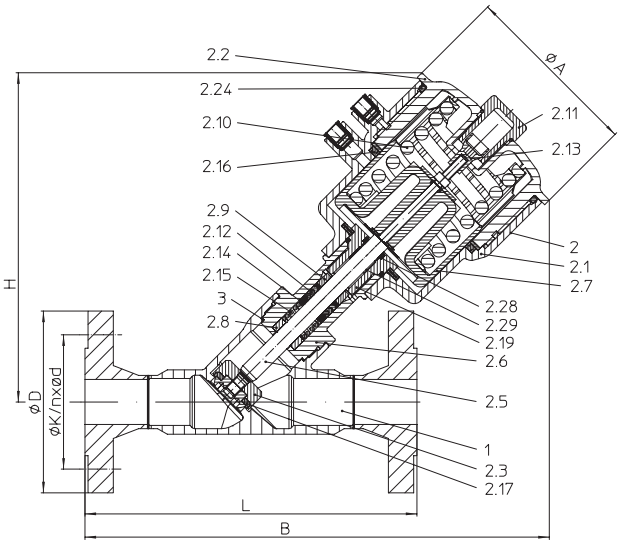

Figure	Nominal pressure	Material	Nominal diameter
52.350....1	PN16	1.4408	DN15-50

Stem sealing
- PTFE-V-ring unit -10°C to 180°C

Plug design
- Isolation plug with PTFE-soft sealing

Shut off class (seat / plug leakage classes)
- Metal / PTFE - Leakage class A acc. to DIN EN 12266-1
- Metal / FPM - Leakage class A acc. to DIN EN 12266-1 (optional)

Actuator material
- PA66 GF (Max. permissible ambient temperature +60°C)

Selection of possible applications

Industrial installations, processing technology, plant manufacturing, etc.
(other applications on request)

Selection of possible flow media

Cooling water, Warm water, Hot water, Steam, Oil, Air, Neutral gases, Alkalis, Alcohol, etc.
(other flow media on request)

Fig. 350 Spring closes on air failure (NC)

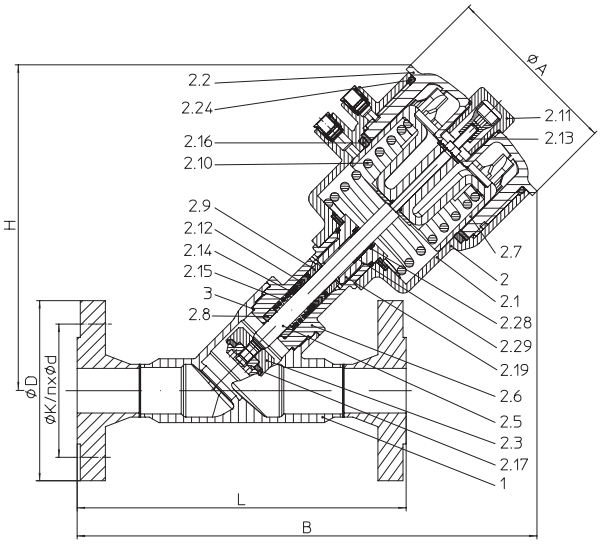

Fig. 350 Spring opens on air failure (optional) (NO)

Dimensions and weights

DN		15	20	25		32	40	50
Actuator		ATG50	ATG50	ATG50	ATG80	ATG80	ATG80	ATG80
L	(mm)	130	150	160		180	200	230
H	(mm)	162	162	173	208	217	224	234
B	(mm)	202	215	224	259	270	280	303
ØA	(mm)	75	75	75	114	114	114	114
ØD	(mm)	95	105	115		140	150	165
ØK	(mm)	65	75	85		100	110	125
n x Ød	(n x mm)	4 x 14	4 x 14	4 x 14		4 x 18	4 x 18	4 x 18
Weight (1.4408)	(kg)	2,9	3,4	4,5	5,3	6,9	7,9	10,3

Face-to-face dimension FTF series 1 acc. to DIN EN 558

Air supply pressure (Function: Spring closes on air failure (NC), on flow-to-open)

DN		15			20			25					32			40			50		
Actuator		ATG50			ATG50			ATG50		ATG80			ATG80			ATG80			ATG80		
Operating pressure max.	(bar)	6	10	16	6	10	16	6	10	6	10	16	6	10	16	6	10	16	6	10	4
Kvs-value	(m^3/h)	6,2			9,6			19,7		20,7			24,8			36,1			54,3		
Travel	(mm)	15			15			15		20			20			20			20		
Air supply pressure min.	(bar)	2,9	4,5	6,8	2,9	4,5	6,8	5,7	8,8	2	3,1	4,8	2,8	4,3	7,4	4,3	7,4	8,8	7	8,8	5

Air supply pressure diagram (Function: Spring opens on air failure (NO), on flow-to-open)

Actuator ATG 50

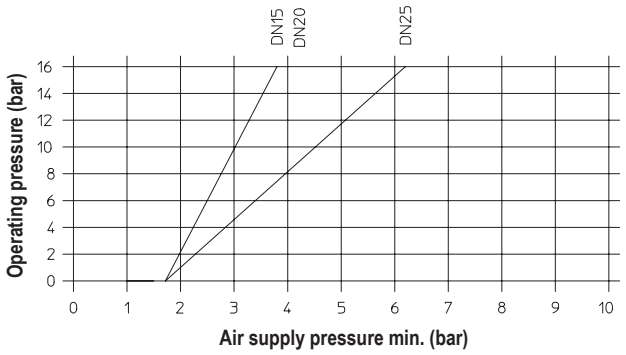

Actuator ATG 80

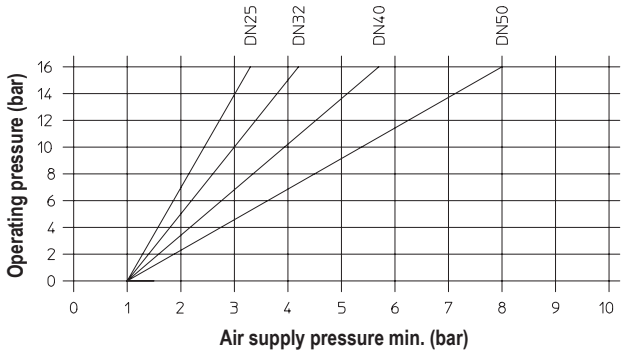

Parts

Pos.	Description	Fig. 52.350....1
1	Body	GX5CrNiMo19-11-2, 1.4408
2	Bonnet, cpl. *	
2.1	Actuator housing	PA66 GF
2.2	Actuator cover	PA66 GF
2.3	Plug	X6CrNiMoTi17-12-2, 1.4571
2.5	Stem	X2CrNiMo17-12-2, 1.4404
2.6	Hood	GX5CrNiMo19-11-2, 1.4408
2.7	Piston	EN AW-AlCu6BiPb, EN AW-2011
2.8	Bushing	PTFE
2.9	Guide bushing	PA66 GF
2.10	Spring	SH
2.11	Sight glass	PA transparent
2.12	V-ring unit	PTFE
2.13	Indication	PA66
2.14	Washer	1.4301
2.15	Spring	X10CrNi18-8, 1.4310
2.16	Sealing ring	NBR
2.17	Sealing ring	PTFE
2.19	Screw joint	X6CrNiMoTi17-12-2, 1.4571
2.24	O-ring	NBR
2.28	Rod seal	FPM
2.29	Cylinder bushing	Stainless steel / PTFE
3	Gasket *	PTFE / Graphite
* Spare parts (Pos. 2.1 - 2.29 will be supplied as unit)		

Information / restriction of technical rules need to be observed!

A production allowance acc. to TRB 801 No. 45 exists

The engineer, designing a system or a plant, is responsible for the selection of the correct valve.

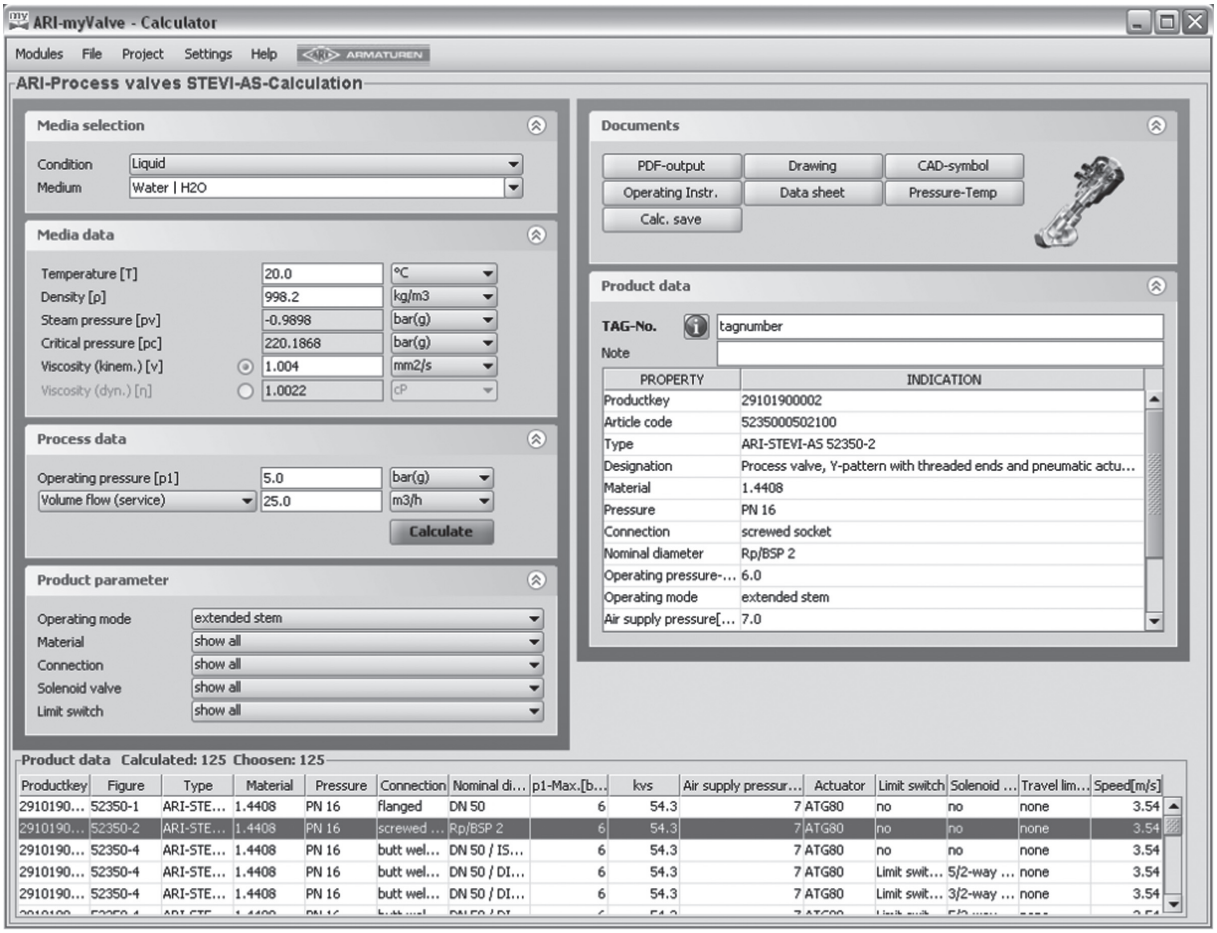

MyValve - Calculator

Contents:

Module ARI-Process valves STEVI-AS-Calcuation

- Sizing (calculation of valve-size with given temperature, flow, and operating pressure)

Media:

Integrated media-databank (more than 160 media) with conditions:

- Vapours / gases
- Steam (saturated and superheated)
- Liquids

Special features:

- Project administration of the calculation and product data incl. spare part drawings concerning to project and tag number
- Direct output or calculation and product data in PDF format
- Product data could be taken for a direct order
- SI- and ANSI-units with direct conversion to another databank
- Settings with over pressure or absolute pressure
- All ARI **Process** valves are integrated in a databank
- Direct access concerning to the product on data sheets, operating instructions, pressure-temperature-diagram and spare part drawings
- Operation in company networks possible (no complex installations on individually PC's necessary)

System Requirements:

Windows operating systems, Linux, etc.

Pressure-temperature-ratings acc. to DIN EN 1092-1

Material			-60°C to <-10°C	-10°C to 100°C	150°C	180°C
1.4408	**PN16**	(bar)	16	16	14,5	13,1

Intermediate values for max. permissible operational pressures can be determined by linear interpolation of the given temperature / pressure chart.

Options

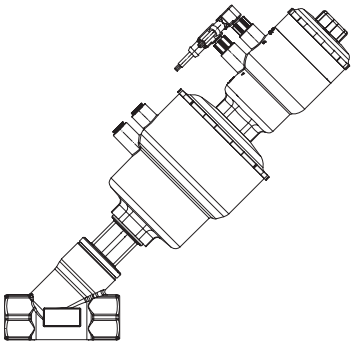

Limit switch, mechanical or induktive operated

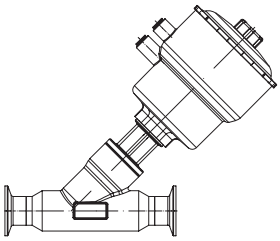

Clamp connection acc. to DIN 32676 or BS 4825-3 (on request)

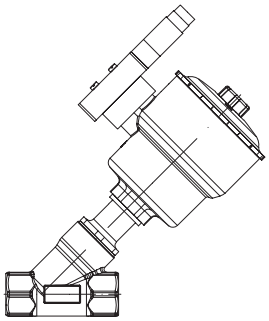

3/2-way NAMUR-solenoid valves
(incl. adapter plate)

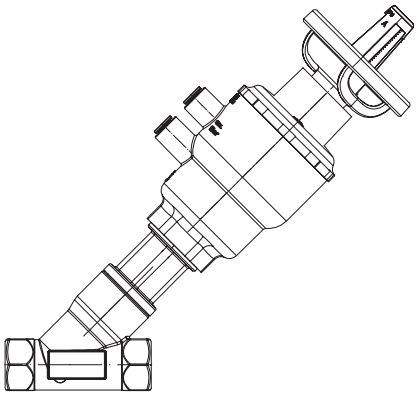

Handwheel
(Function: Spring closes on air failure (NC),
on flow-to-open)

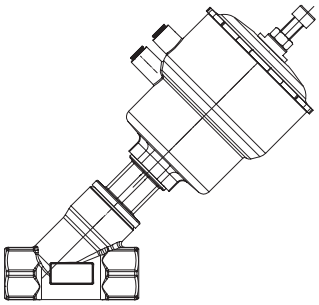

Travel limiter

Please indicate when ordering

- Figure-No.
- Nominal diameter
- Nominal pressure
- Body material
- Plug design
- Stem sealing
- Actuator
- Special design / accessories

Please indicate in your order, if the valves are to be installed in hazardous areas (ATEX).

Example:

Figure 52.350; Nominal diameter DN25; Nominal pressure PN16; Body material 1.4408; Isolation plug; Stem sealing PTFE-V-ring unit; pneumatic actuator ATG50.

Dimensions in mm
Weights in kg
Pressures in barg (gauge)
1 bar ≙ 105 Pa ≙ 0,1 MPa
Kvs in m^3/h

Technology for the Future.
GERMAN QUALITY VALVES

ARI-Armaturen Albert Richter GmbH & Co. KG, D-33756 Schloß Holte-Stukenbrock,
Tel. +49 52 07 / 994-0, Telefax +49 52 07 / 994-158 or 159 Internet: http://www.ari-armaturen.com E-mail: info.vertrieb@ari-armaturen.com